Process Capable

RoHS Compliant 2011/65/EU

Compliant Halogen Free

REV.	ECN NO.	DESCRIPTION	DATE	DESIGN

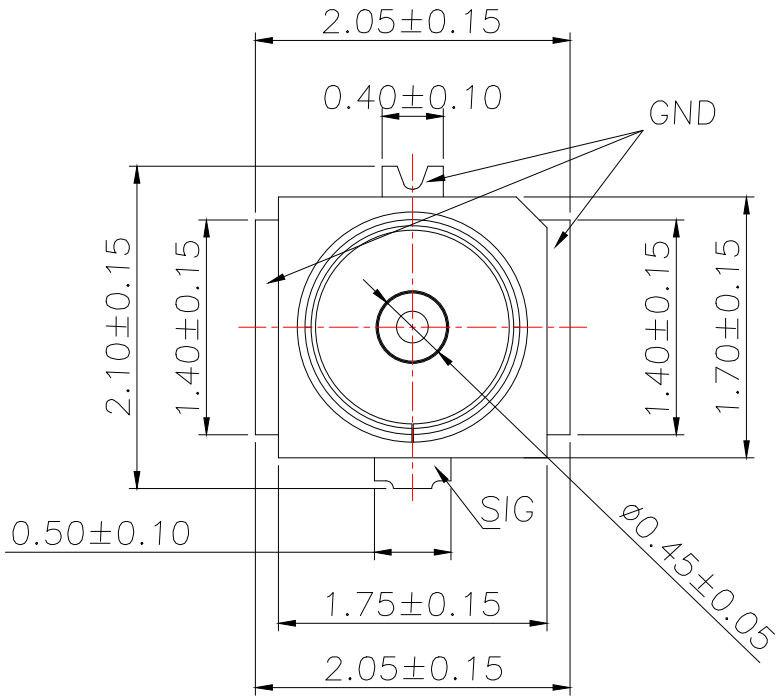

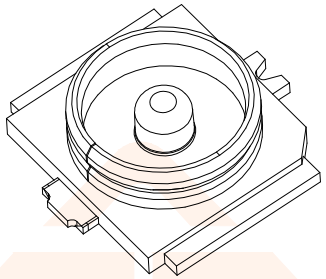

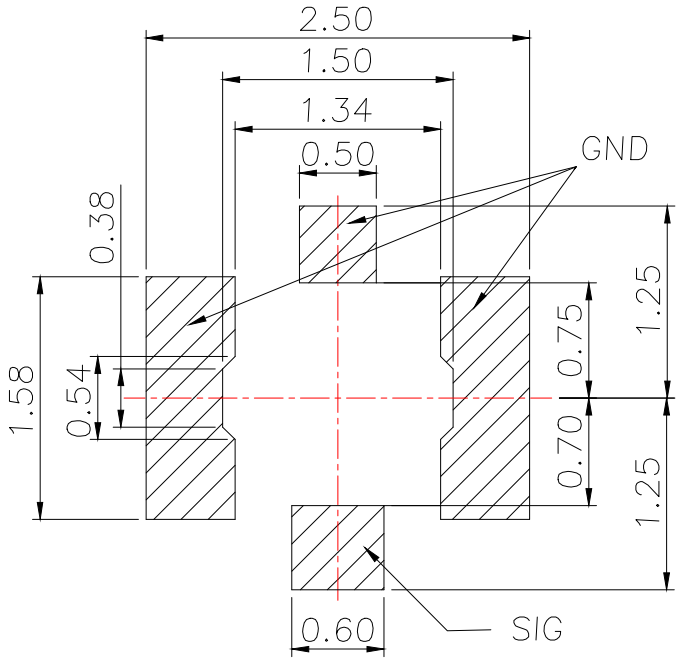

Recommended PCB Layout
(General Tolerance Is ±0.05)

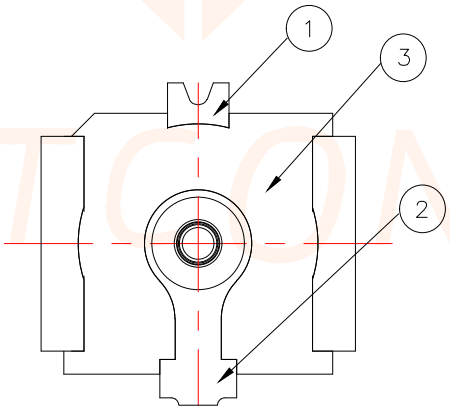

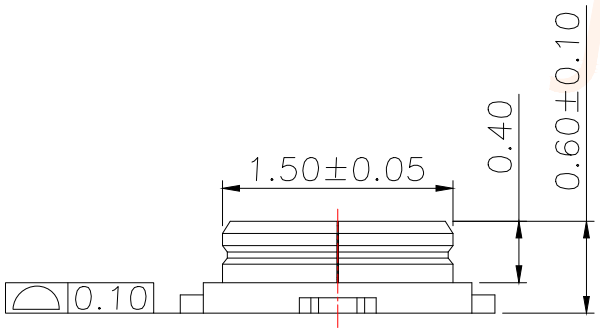

NOTE:

1. MATERIAL:
   - ① 1.1. HOUSING:LCP E6808,COLOR:BLACK,UL 94V-0;
   - ② 1.2. CONTACT: C2680,T=0.10mm;
   - ③ 1.3. SHELL:C5191,T=0.12mm.
2. FINISH:
   - 2.1. CONTACT: GOLD FLASH PLATED ON MATING AREA, GOLD FLASH ON SOLDER TAILS, 1.27um Min NICKEL PLATED UNDER OVER OF THE ALL;
   - 2.2. SHELL: GOLD FLASH ON THE ALL,1.27um Min NICKEL PLATED UNDER OVER OF THE ALL;

TOLERANCE		深圳聚兴泰电子科技有限公司 Shenzhen Juxingtai Electronic Technology Co., Ltd		
X.:±0.50	X.°:±2°	PART NO. ARF-004	TITLE: Ultra Small Surface Mount Coaxial CONN. USS RF SERIES	
X.X:±0.10	X.X°:±1°			
X.XX:±0.05				
UNITS	mm	DESIGN: Ethan	MANUFACTURE DWG	
MATERILA	— — —	CHED: Olvia	SCALE	SHEET
FINISH	— — —	APPD: Ava	N:A	1/1