| REV. | ECN NO. | DR | DATE |
|---|---|---|---|
| A1 | NEW | DR.C | 19.05.07 |

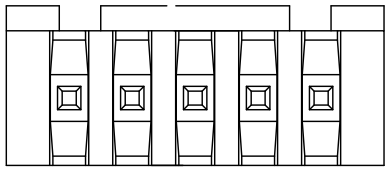

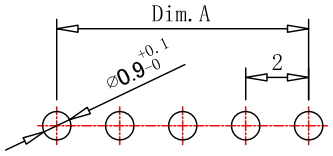


PCB LAYOUT
TOLERANCE±0.05

■ 技术参数 SPECIFICATIONS:

◆ 材质：尼龙 UL 94V-0；黄铜
Material: Nylon UL 94V-0 ; Brass

◆ 镀层：锡
Plating: Tin

◆ 颜色：按订单要求
Colour: As per order requirements

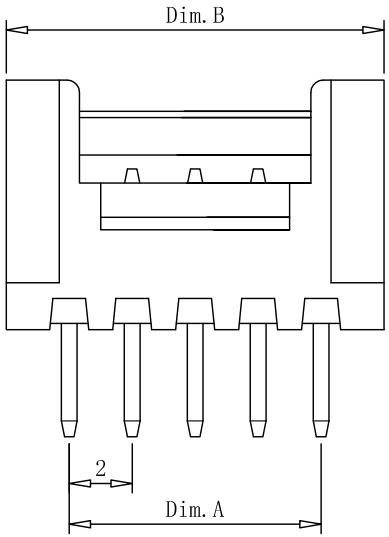


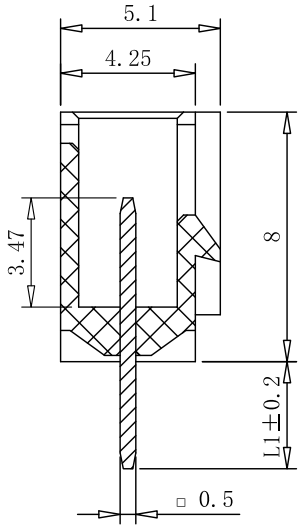


| | |
|---|---|
| L1=3.4 | HY-NA 8.6*3.4 |
| L1=2.8 | HY-NA 8*2.8 |
| L1=2.1 | HY-NA 7.4*2.1 |
| Size | Part No |

| | | | | | | | | |
|---|---|---|---|---|---|---|---|---|
| 11 | HY-11A | 20.00 | 24.00 | | | | | |
| 10 | HY-10A | 18.00 | 22.00 | | 20 | HY-20A | 38.00 | 42.00 |
| 9 | HY-9A | 16.00 | 20.00 | | 19 | HY-19A | 36.00 | 40.00 |
| 8 | HY-8A | 14.00 | 18.00 | | 18 | HY-18A | 34.00 | 38.00 |
| 7 | HY-7A | 12.00 | 16.00 | | 17 | HY-17A | 32.00 | 36.00 |
| 6 | HY-6A | 10.00 | 14.00 | | 16 | HY-16A | 30.00 | 34.00 |
| 5 | HY-5A | 8.00 | 12.00 | | 15 | HY-15A | 28.00 | 32.00 |
| 4 | HY-4A | 6.00 | 10.00 | | 14 | HY-14A | 26.00 | 30.00 |
| 3 | HY-3A | 4.00 | 8.00 | | 13 | HY-13A | 24.00 | 28.00 |
| 2 | HY-2A | / | 6.00 | | 12 | HY-12A | 22.00 | 26.00 |
| Circuits | Part No | Dim.A | Dim.B | | Circuits | Part No | Dim.A | Dim.B |

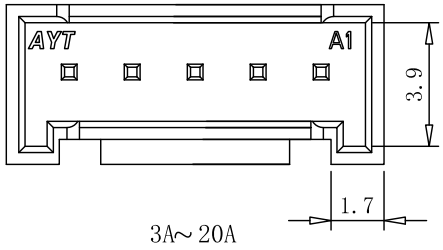


3A～20A

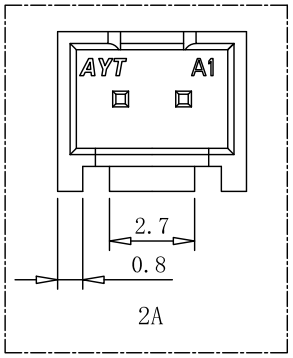


2A

| | | | |
|---|---|---|---|
| 未注公差 TOLERANCE | | THIRD ANGLE PROJECTION | |
| ＞10～30：±0.5 | | 拟制 DRAWING BY Mr Liu 19-05-07 | |
| ＞3～10：±0.4 | | 确认 CHECKED BY Mr Chen 19-05-07 | |
| ＞0～3：±0.3 | | 审核 APPROVED BY Mr Zhao 19-05-07 | |
| SIZE | A4 | UNIT | MM |

CNCM 浙江成明电子科技有限公司
ZHEJIANG CHENGMING ELECTRCNIC TECHNOLOGY CO.,LTD

DWG NO: | TITLE: 2.00mm Wire to Board

型号 PART NO: HY-nACM

| SCALE | 1:1 | SHEET | 1 OF 1 | REV. | A1 |
|---|---|---|---|---|---|