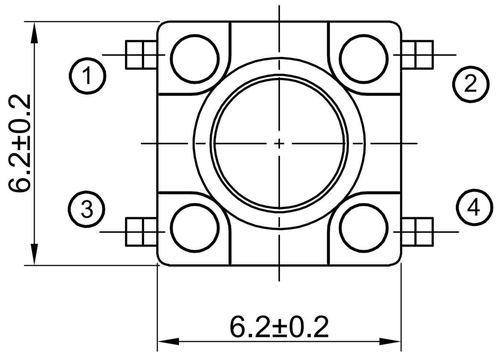

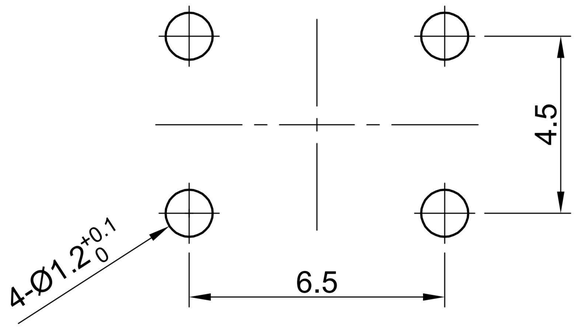

P.C.B LAND DIMENSION

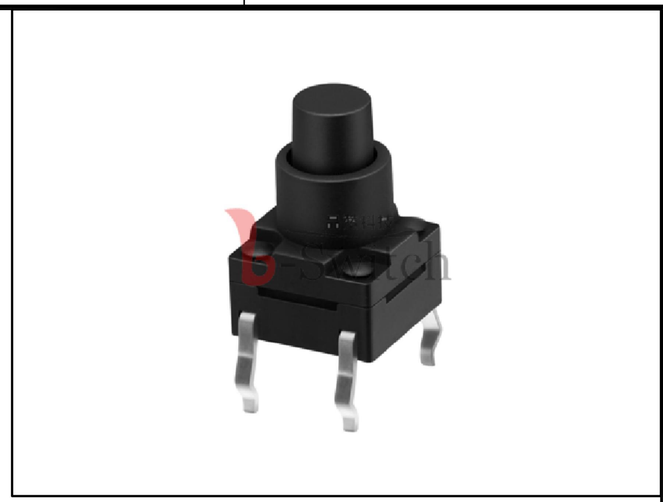

GT-TC116X-HXXX-LX

Operating Force
A=160gf
B=250gf
C=100gf
D=70gf
E=130gf
F=320gf
G=400gf

Switch Height
H090=9.0mm
H095=9.5mm
H100=10.0mm
H110=11.0mm
H120=12.0mm
H130=13.0mm
H135=13.5mm
H140=14.0mm
H145=14.5mm
H150=15.0mm

Switch Lifetime (Force)
L05=50,000 Cycles
L1=100,000 Cycles
L3=300,000 Cycles
L5=500,000 Cycles

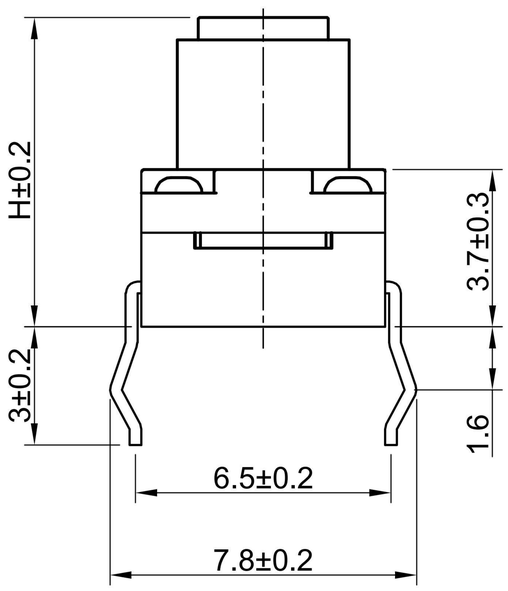

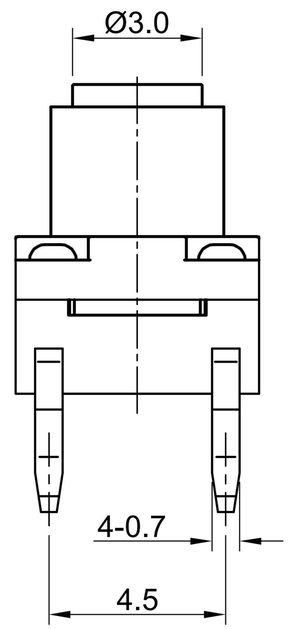

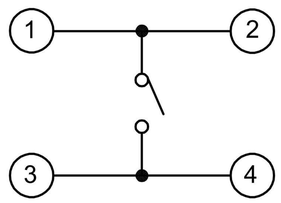

CIRCUIT DIAGRAM

G-Switch Specification:
1.Operating temperature range：-40℃to+85℃
2.Rating：50mA.12V DC
3.Insulation resistance：100MΩ min.100V DC
4.Dielectric strength： 250V AC for 1 min
5.Contact Resistance:100m Ω max.
6.Travel: 0.25±0.1mm
7.Waterproof Grade：IPX7

Pb Process Capable | RoHS Compliant 2002/95/EC | HALOGEN Compliant Halogen Free

SCALE: 1:1	UNIT: mm	Title: Vertical Tact Switch DIP With Sheath 6.2×6.2×Hmm				
SIZE: A4						
Unless otherwise General Tolerance: X. ±0.30, X.x ±0.20, X.xx ±0.15, X.xxx ±0.10, Angles ±3°		Molde Code: GT-TC116B-HXXX-LX				
		DRAWN	CHECKED	APPROVED	DATE	
		Xia	Chen	Chen	2023.02.01	REV: A0 / SHEET: 1/1

品赞科技 b-Switch ®