RoHS Compliant

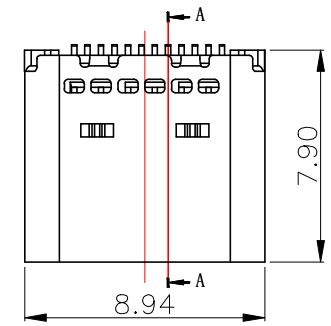

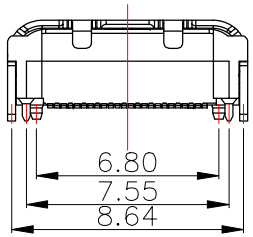

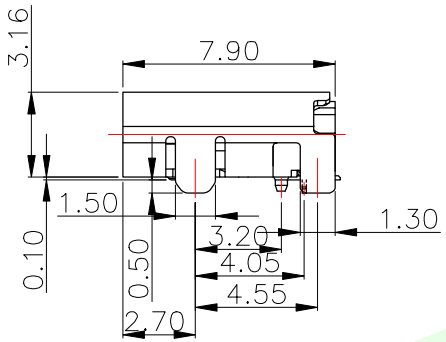

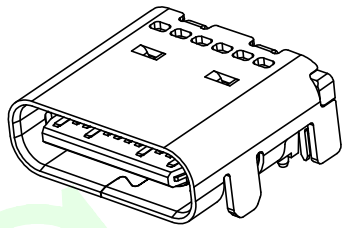

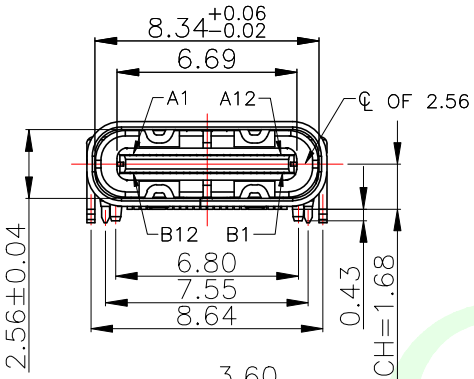

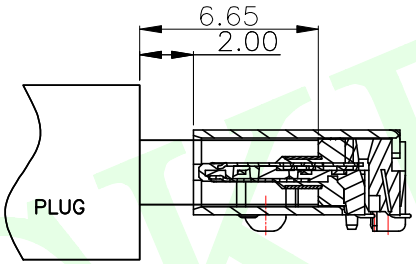

AFTER MATING

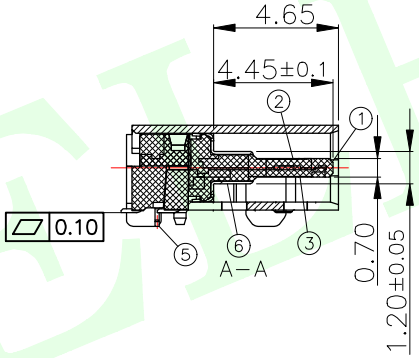

NOTES:
1.MECHANICAL PERFORMANCE,
1−1.INSERTION FORCE: 5N~20N.
1−2.REMOVAL FORCE: 5N~20N.
1−3.DURABILITY: 10000 CYCLES.
2.ELECTRICAL PERFORMANCE,
2−1. CURRENT RATING: 5.0A
2−2. LLCR: VBUS & GND PINS AND OTHER PINS: 40mΩ/PIN MAX.SHIELD: 50mΩ/MAX.
2−3.INSULATION RESISTANCE: 100MΩ MIN
2−4.DIELECTRIC WITHSTAND VOLTAGE,AC 100V FOR 1 MINUTE.
3.ENVIRONMENTAL PERFORMANCE:
OPERATING TEMPERATURE: −25°C~+85°C.

LCK−TCF 915 − LXXX Y L− G1

- LCK: 联晟欣 LCK
- TCF: 产品类别 TCF:TYPE C母头 / TCM:TYPE C公头
- 915: 产品流水料号识别码
- LXXX: 壳长 L79:7.9
- Y: 有柱无柱 Y: 有柱 / W: 无柱
- L: 包装方式 L:圆盘 / B:吸塑盒 / T:管装
- G1: 电镀规格 G1: 1U / G3: 3U (以此推类)

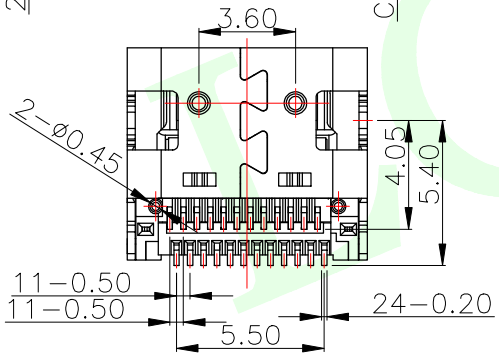

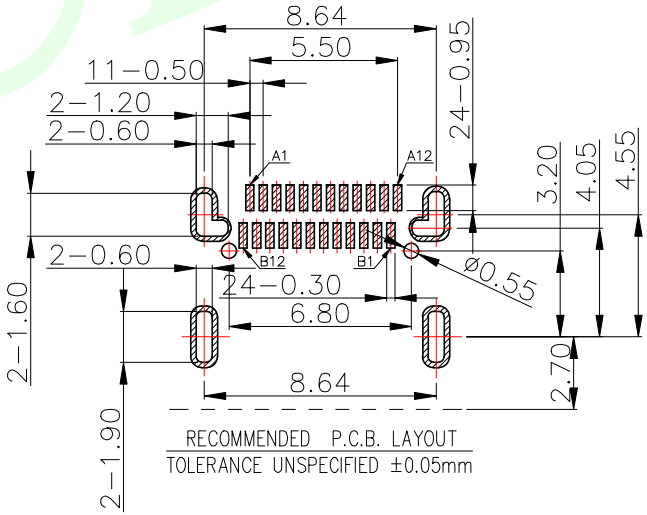

RECOMMENDED P.C.B. LAYOUT
TOLERANCE UNSPECIFIED ±0.05mm

USB TYPE−C PIN ASSIGNMENTS

PIN NUMBER	SIGNAL NAME	PIN NUMBER	SIGNAL NAME
A1	GND	B12	GND
A2	TXp1	B11	RXp1
A3	TXn1	B10	RXn1
A4	Vbus	B9	Vbus
A5	CC1	B8	SBU2
A6	Dp1	B7	Dn2
A7	Dn1	B6	Dp2
A8	SBU1	B5	CC2
A9	Vbus	B4	Vbus
A10	RXn2	B3	TXn2
A11	RXp2	B2	TXp2
A12	GND	B1	GND

NO.	PART NAME	QTY.	MATERIAL	REMARK
⑥	EMI PLATE	1 PCS	STAINLESS STEEL T=0.10	——
⑤	MID PLATE	1 PCS	STAINLESS STEEL T=0.15	Soldering Plating: Sn
④	SHELL	1 PCS	STAINLESS STEEL T=0.3	Ni
③	TERMINAL 2(12Pin)	1SET	COPPER ALLOY T=0.15	Under Plating: Ni Contact Plating: Au Soldering Plating: Au
②	TERMINAL 1(12Pin)	1SET	COPPER ALLOY T=0.15	
①	HOUSING	1 PCS	HIGH TEMP.THERMOPLASTIC UL94V−0	BLACK

QUADRANT POINT (QP)
TANGERCY POINT (TP)
INTERSECTION POINT (IP)

联晟欣连接器（深圳）有限公司
Lianshengxin Connector (Shenzhen) Co., Ltd

UNLESS OTHERWISE SPECIFIED,TOLERANCE:

X.	±0.25
X.x	±0.20
X.xx	±0.15
ANGULAR	±3°

DESIGN	Andy	DATE	2014.12.24
CHECKED		DATE	
APPROVED		DATE	

TITLE: USB CF 24PIN SMT TYPE TOP MOUNT WITH POST

PART NO: LCK−TCF915−L79YL−G1 | REV: 04 | SCALE: 1:1 | UNIT: mm
DRAWING NO: 102022221D | SIZE: A4 | SHEET: 1/1