© – TE Connectivity. All Rights Reserved.

REVISIONS					
P	LTR	DESCRIPTION	DATE	DWN	APVD
	R5	REVISED PER ECR-25-240578	17JUN2025	SA	DSC

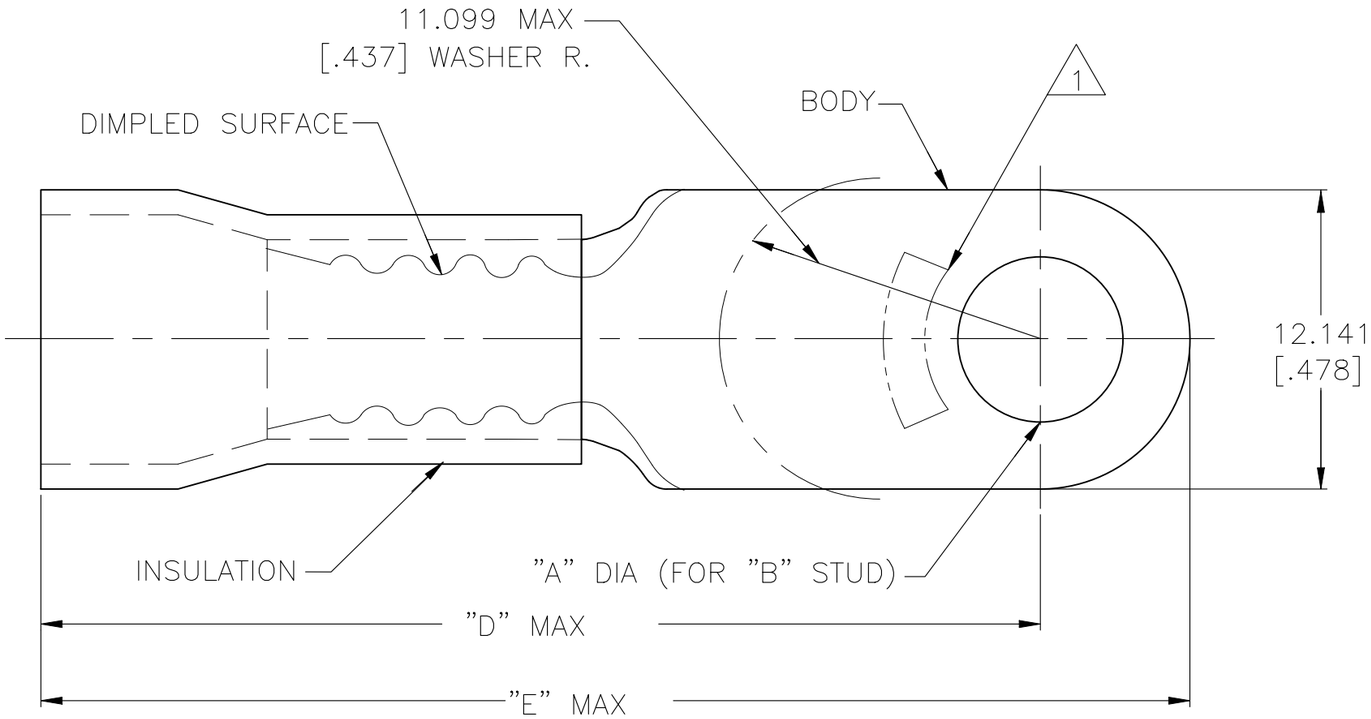

AMP WIRE RANGE	FILE E13288	LR7189 Certified
8 AWG STRANDED	8 AWG STRANDED	8 AWG STRANDED

1. STAMP AMP 8* LOCATE APPROX AS SHOWN
2. BODY MATERIAL THK 0.991±0.051[.039±.002]
3. SEE TABLE FOR WIRE INSULATION DIA MAX
4. TAPE ITEMS ARE ON 30.480[1.200] CENTERS

"E"	"D"	WIRE INSULATION DIA	"B"	"A"	QTY	PACKAGE TYPE	PART NO
PRELIMINARY	40.284 [1.586]	34.137 [1.344]	9.144 [.360]	M6[1/4]	6.731±0.127 [.265±.005]	1 KIT = 50 PIECES	LOOSE PC	6-52041-1
PRELIMINARY	40.284 [1.586]	34.137 [1.344]	9.144 [.360]	M4[#8]	4.343±0.076 [.171±.003]	1 KIT = 50 PIECES	LOOSE PC	6-52041-0
40.640 [1.600]	34.493 [1.358]	8.382 [.330]	M6[1/4]	6.731±0.127 [.265±.005]	500	ON TAPE	52041-9
40.284 [1.586]	34.137 [1.344]	9.144 [.360]					52041-7
			M4[#8]	4.343±0.076 [.171±.003]			52041-6
40.640 [1.600]	34.493 [1.358]	8.382 [.330]	M6[1/4]	6.731±0.127 [.265±.005]	100	LOOSE PC	52041-3
40.284 [1.586]	34.137 [1.344]	9.144 [.360]					52041-1
			M4[#8]	4.343±0.076 [.171±.003]			52041

AMP INCORPORATED
CUSTOMER SERVICE SYSTEMS

FOR ADDITIONAL PRODUCT INFORMATION OR COPIES OF DRAWINGS AND TECHNICAL DOCUMENTS	PRODUCT INFORMATION CENTER 1-800-522-6752
FOR APPLICATION TOOLING INFORMATION	TOOLING ASSISTANCE CENTER 1-800-722-1111
FOR ORDER ENTRY	1-800-526-5142

MAX RECOMMENDED OPERATING TEMPERATURE: 105°C[221°F]

VOLTAGE RATING: 600 V MAX

CIRCULAR MIL AREA: 6.64-10.54mm²[13,100-20,800] STRANDED

THIS DRAWING IS A CONTROLLED DOCUMENT.

DIMENSIONS: mm [INCHES]

TOLERANCES UNLESS OTHERWISE SPECIFIED:
0 PLC ± –
1 PLC ± –
2 PLC ± –
3 PLC ± 0.127[.005]
4 PLC ± –
ANGLES ± –

MATERIAL: COPPER PER ASTM B-152
INSULATION: PVC

FINISH: BODY: TIN PLATE PER ASTM-B545
INSULATION: COLOR-RED

DWN S.S. GOULDEN 9-28-93
CHK R. HERSEY 9-28-93
APVD B. BARE 9-28-93
PRODUCT SPEC UL 486 A-B
APPLICATION SPEC 114-2161
WEIGHT –

TE Connectivity

NAME: TERMINAL, RING TONGUE, PLASTI-GRIP WIRE SIZE: 8 AWG

SIZE	CAGE CODE	DRAWING NO	RESTRICTED TO
A3	00779	C-52041	–

CUSTOMER DRAWING | SCALE 4:1 | SHEET 1 OF 1 | REV R5

1470-19 (1/15)