© 20 TE CONNECTIVITY CORPORATION.

REVISIONS					
P	LTR	DESCRIPTION	DATE	DWN	APVD
	A2	ADD NEW PN	20AUG2020	Z.J	I.Y
	A3	ECN-23-193761	11JAN23	Q.L	J.Z
	A4	ECN-24-270751	18JUN24	GSK	J.Z
	A5	ECN-24-291897	05NOV24	Z.J	J.Z

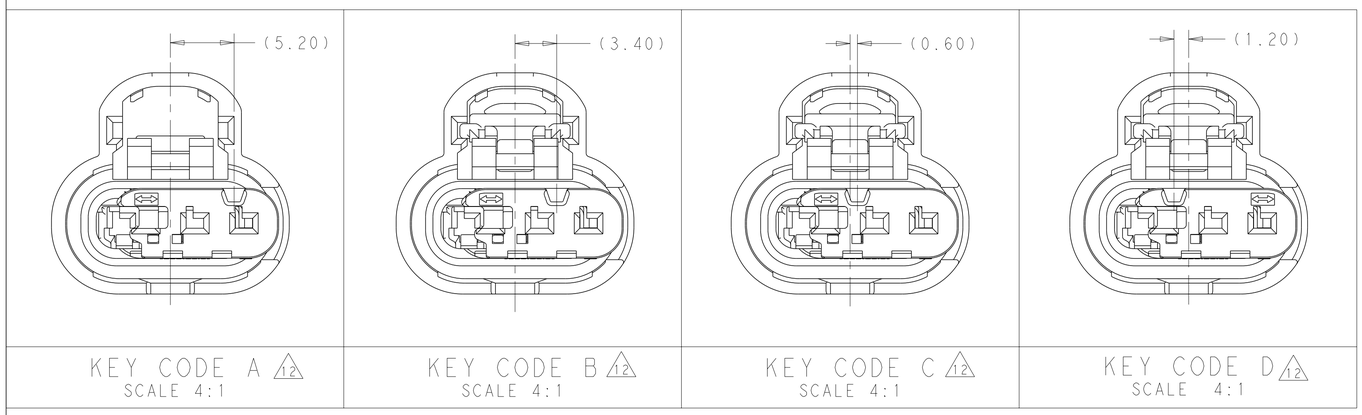

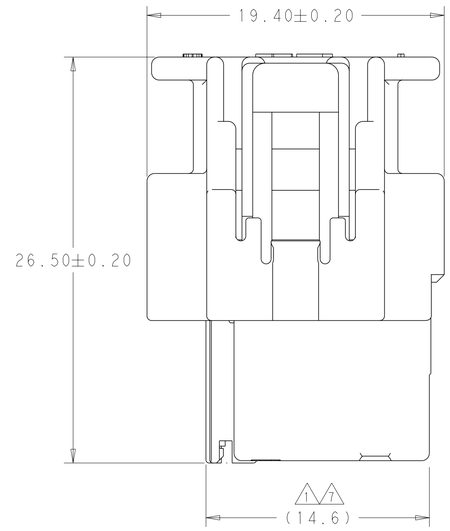

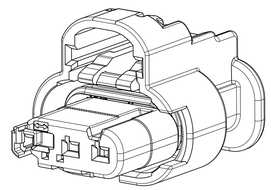

ISOMETRIC VIEW
SCALE 3:1

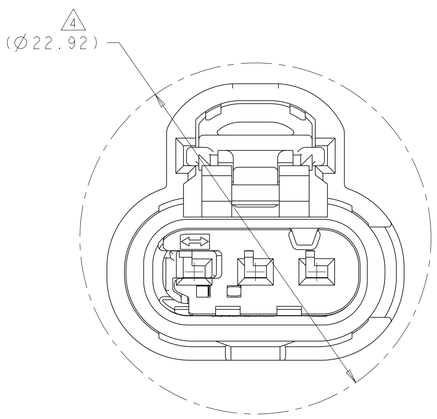

ISL SHOWN IN
FINAL (LOCKED) POSITION - REF ONLY
SCALE 5:1

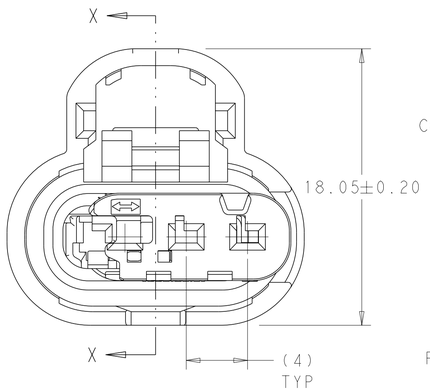

ISL SHOWN IN
PRE-LATCHED (AS-SHIPPED) POSITION

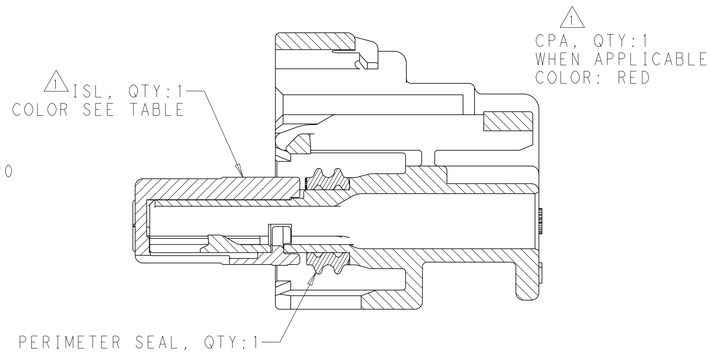

SECTION X-X
SHOWN WITH CPA AND ISL IN
PRE-LATCHED POSITION

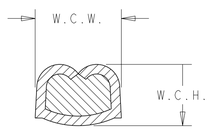

WIRE CRIMP
DIMENSIONS

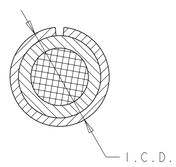

INSULATION CRIMP
DIMENSIONS

NOTES:

1. ISL AND CPA (WHEN APPLICABLE) ARE SHIPPED IN THEIR PRE-LATCHED POSITIONS.
2. TERMINALS SOLD SEPARATELY. FOR USE WITH TE MCON 1.2mm CLEAN BODY CONTACT WITH WIRE SEAL. SEE TABLE.
3. APPLICABLE INTERFACE DRAWINGS: EWCAP 120-S-003-1-Z01 AND 120-S-003-1-Z02.
4. MINIMUM FEED THROUGH CONDITION WITH 1.0mm CLEARANCE ALL AROUND.
5. TRACEABILITY CODE (YY = TWO DIGIT YEAR, JJJ = 3 DIGIT JULIAN DAY, S = 1 DIGIT SHIFT).
6. FOR OPTIONAL TERMINAL CAVITY BLOCKING, CONTACT TE SALES REPRESENTIVE OR CUSTOMER SERVICE.
7. SEE INSTRUCTION SHEET 408-32103 FOR CONNECTOR SERVICE AND ISL OPERATION. ISL ACTUATION DISTANCE IS 2.0mm.
8. CONTACT PLATING AND APPLICABLE INDIVIDUAL WIRE SEAL ARE APPLICATION DEPENDENT. CONTACT TE SALES REPRESENTATIVE OR CUSTOMER SERVICE FOR DETAILS.
9. FOR WIRE CRIMP DETAILS, SEE TE APPLICATION SPECIFICATION 114-18464.
10. DOCUMENTED I.C.D. IS SPECIFIED TO MEET MOST WIRE SEAL APPLICATIONS. HOWEVER, I.C.D. IS HIGHLY DEPENDENT ON INSULATION TYPE AND OD. SUFFICIENT GRIP OF THE WIRE SEAL MUST BE OBTAINED SUCH THAT WIRE SEAL DOES NOT DISPLACE FROM INSULATION GRIP DURING CONTACT INSERTION INTO CONNECTOR HOUSING. THE WIRE SEAL SHALL NOT BE CRIMPED TOO TIGHTLY THAT THE WIRE SEAL TEARS DURING THE CRIMPING OPERATION.
11. CONNECTOR VALIDATION PER GMW3191 T4,V4,S3 WITH THE FOLLOWING EXCEPTIONS:
    PRIMARY TERMINAL RETENTION FORCE > 25 NEWTONS.
12. KEY CODE DIMENSIONS ARE SHOWN WITH ISL IN PRE-LATCHED POSTION. FOR DIMENSION OF KEY WITH ISL IN FINAL POSITION, ADJUST SHOWN DIMENSIONS BY 2.0mm.
13. MATES WITH STRAIGHT EXIT WIRE DRESS, TE PN 2272164-1 AND RIGHT ANGLE EXIT WIRE DRESS, TE PN 2272165-1.

A5

CPA (YES/NO)	ISL COLOR	KEY CONFIGURATION	PART NUMBER
YES	BLUE	KEY CODE D	1-2355691-4
	DK GRAY	KEY CODE C	1-2355691-3
	LT GRAY	KEY CODE B	1-2355691-2
	BLUE	KEY CODE A	1-2355691-1
NO	BLUE	KEY CODE D	2355691-4
	DK GRAY	KEY CODE C	2355691-3
	LT GRAY	KEY CODE B	2355691-2
	BLUE	KEY CODE A	2355691-1

MAX TEMP	FEMALE TERMINAL P/N	W.C.H	W.C.W	I.C.D	WIRE SEAL PART NUMBER
150°C 8	1418844	9	9	10	8
	1670146				
	1418850				

THIS DRAWING IS A CONTROLLED DOCUMENT.

DIMENSIONS: mm

TOLERANCES UNLESS OTHERWISE SPECIFIED:
0 PLC ±-
1 PLC ±0.3
2 PLC ±0.15
3 PLC ±-
4 PLC ±-
ANGLES ±-

MATERIAL - -
FINISH - -

DWN J.ZE 25APR2019
CHK J.ZONG 25APR2019
APVD J.YIN 25APR2019
PRODUCT SPEC -
APPLICATION SPEC -
WEIGHT -

TE Connectivity

NAME PLUG ASSEMBLY, SEALED, 3 POSITION, MCON -

SIZE A1 | CAGE CODE 00779 | DRAWING NO C-2355691 | RESTRICTED TO

CUSTOMER DRAWING | SCALE 5:1 | SHEET 1 OF 1 | REV A5

printed on 5 Nov 2024 09:55 (China Standard Time) from TE354512