PNP Silicon

Darlington Transistor

BD676/BD676A

FEATURES

- **High DC Current Gain**
- **Complementary to BD675/BD675A**
- **Package:TO-126**

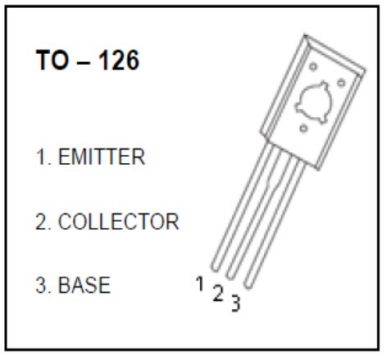

Maximum Ratings (Ta = 25°,unless otherwise noted)

Parameter	Symbol	Rating	Unit
Collector-base voltage	V_{CBO}	-45	V
Collector-emitter voltage	V_{CEO}	-45	V
Emitter-base voltage	V_{EBO}	-5	V
Collector current	I_C	-4	A
Base Current	I_B	-100	mA
Collector Power Dissipation (T_C = 25°)	P_C	40	W
Junction Temperature	Tj	150	℃
Storage Temperature	Tstg	-60～＋150	℃

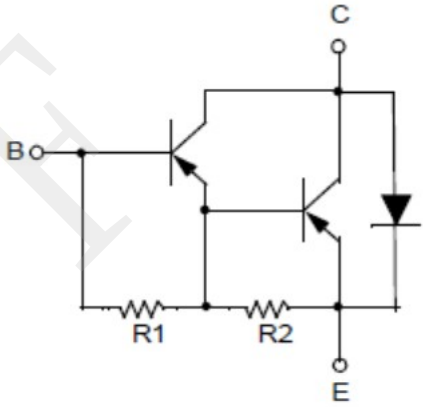

Electrical Characteristics（Ta=25℃）

Parameter		Symbol	Test Condition	Min	Typ	Max	Unit
Collector-Base Breakdown Voltage		BV_{CBO}	I_C=-1mA,I_E=0	-45			V
Collector-Emitter Sustaining Voltage		$V_{CEO(SUS)}$	I_C=-50mA,I_B=0	-45			V
Emitter-Base Breakdown Voltage		BV_{EBO}	I_B=-2mA, I_C=0	-5			V
collector-base cut-off current		I_{CBO}	V_{CB}=-45V，I_E=0			-0.2	mA
collector-emitter cut-off current		I_{CEO}	V_{CE}=-25V，I_B=0			-0.5	mA
emitter-base cut-off current		I_{EBO}	V_{EB}=-5V，I_C=0			-2	mA
DC current gain	BD676	H_{FE}	V_{CE}=-3V，I_C=-1.5A	750			
	BD676A		V_{CE}=-3V，I_C=-2A	750			
collector-emitter saturation voltage	BD676	$V_{CE(SAT)1}$	I_C=-1.5A，I_B=-30mA			-2.5	V
	BD676A		I_C=-2A，I_B=-40mA			-2.8	
Base−Emitter On Voltage	BD676	$V_{BE(on)}$	V_{CE}=-3V，I_C=-1.5A			-2.5	V
	BD676A		V_{CE}=-3V，I_C=-2A			-2.5	