NPN Silicon

Darlington Transistor

BD679/BD679A

FEATURES

- **High DC Current Gain**
- **Complementary to BD680/BD680A**
- **Package:TO-126**

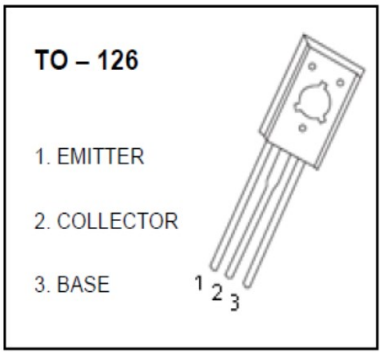

Maximum Ratings (Ta = 25°,unless otherwise noted)

Parameter	Symbol	Rating	Unit
Collector-base voltage	V_{CBO}	80	V
Collector-emitter voltage	V_{CEO}	80	V
Emitter-base voltage	V_{EBO}	5	V
Collector current	I_C	4	A
Base Current	I_B	100	mA
Collector Power Dissipation (T_C = 25°)	P_C	40	W
Junction Temperature	Tj	150	℃
Storage Temperature	Tstg	-60～＋150	℃

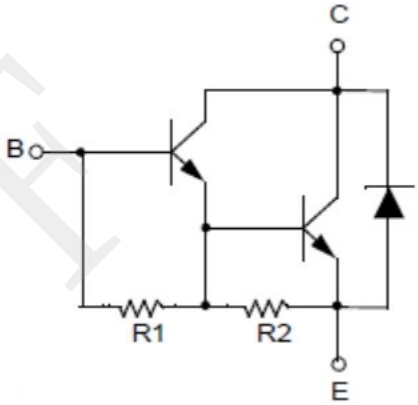

Electrical Characteristics（Ta=25℃）

Parameter		Symbol	Test Condition	Min	Typ	Max	Unit
Collector-Base Breakdown Voltage		BV_{CBO}	I_C=1mA,I_E=0	80			V
Collector-Emitter Sustaining Voltage		$V_{CEO(SUS)}$	I_C=50mA,I_B=0	80			V
Emitter-Base Breakdown Voltage		BV_{EBO}	I_B=2mA, I_C=0	5			V
collector-base cut-off current		I_{CBO}	V_{CB}=80V，I_E=0			0.2	mA
collector-emitter cut-off current		I_{CEO}	V_{CE}=40V，I_B=0			0.5	mA
emitter-base cut-off current		I_{EBO}	V_{EB}=5V，I_C=0			2	mA
DC current gain	BD679	H_{FE}	V_{CE}=3V，I_C=1.5A	750			
	BD679A		V_{CE}=3V，I_C=2A	750			
collector-emitter saturation voltage	BD679	$V_{CE(SAT)1}$	I_C=1.5A，I_B=30mA			2.5	V
	BD679A		I_C=2A，I_B=40mA			2.8	
Base−Emitter On Voltage	BD679	$V_{BE(on)}$	V_{CE}=3V，I_C=1.5A			2.5	V
	BD679A		V_{CE}=3V，I_C=2A			2.5	