VER	MARK	PR. BY	DESCRIPTION	DATE

RoHs

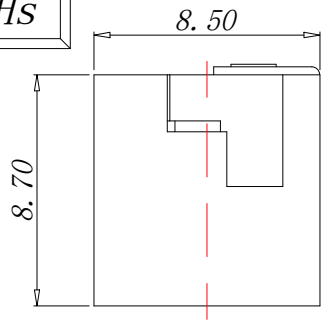

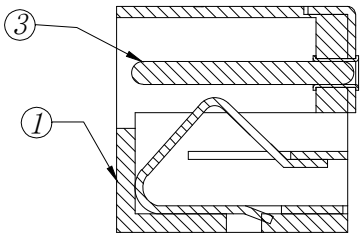

A-A

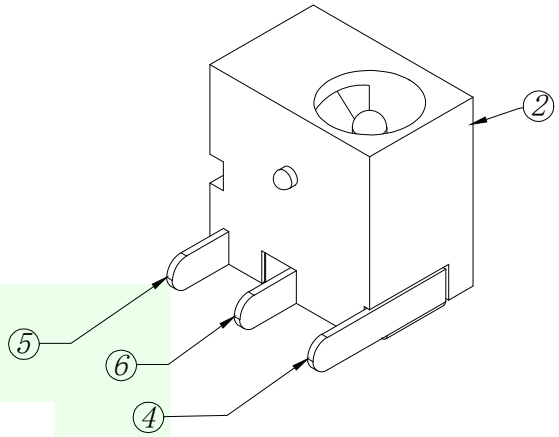

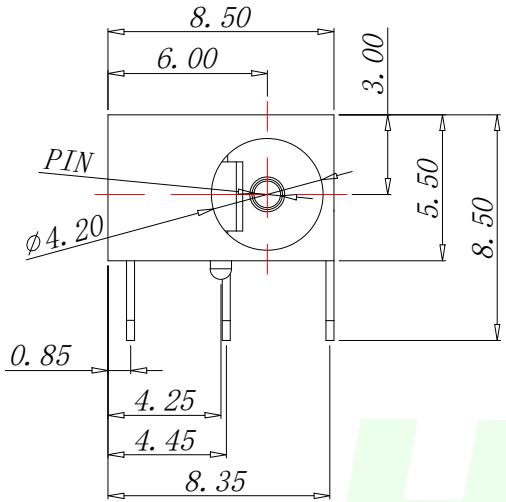

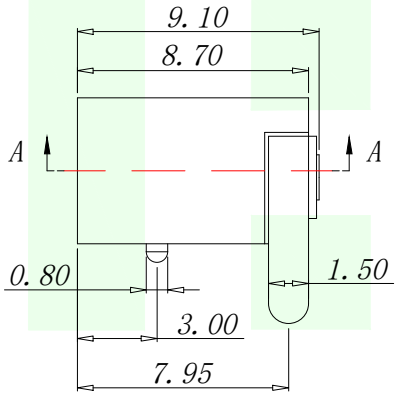

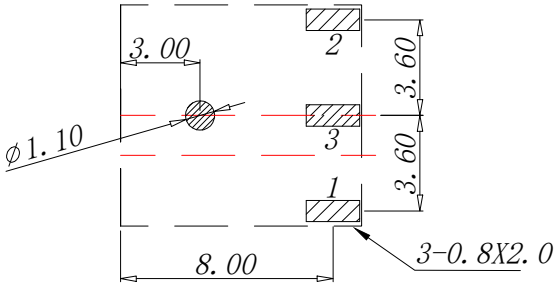

PCB. WELDING DRAWING (TOLERANCE: ±0.05)

PIN	MODLE
φ1.3	DC006-A13
φ1.65	DC006-A16.5

Main technical performance	
Rated electrical load	DC 12V 2A
Contact resistance	≤30m Ω
Insulation resistance	≥100M Ω
Pressure resistance	AC 500V 1min
Insertion force	3-30N
Operating temperature range	-20C° ~+70C°
service life	5000cycles

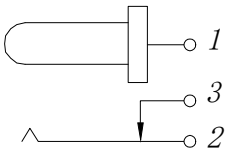

SCHEMATIC

序号	名称	数量	材料	备注
6	弹片	1	H65	镀银
5	插片	1	H62	镀银
4	平片	1	H62	镀银
3	中心针	1	H62	铜锡
2	盖板	1	PPA	黑
1	基座	1	PPA	黑

GENERAL TOLERANCES UNLESS SPECIFIED

X.° ±0.30	X.° ±5°
X.X° ±0.25	X.X° ±1°
X.XX°±0.15	

MANUFACTURE DWG

HMT CONN 深圳市华明通电子有限公司 Shenzhen Huamingtong Electronics Co., Ltd

PART NO.	DC006-AN
TITLE:	DC SOCKET
DESIGN:	James
CHED:	Talen
APPD:	Sophia
CUSTOMER	
SIZE	A4
UNITS	MM
SCALE	N:A
SHEET	1/1