RoHS

序号	品名	材质
①	VH3.96直针WTB胶芯	PA66 UL94V-0 米色 白色
②	VH3.96平弯WTB端子	铜合金/表面镀锡

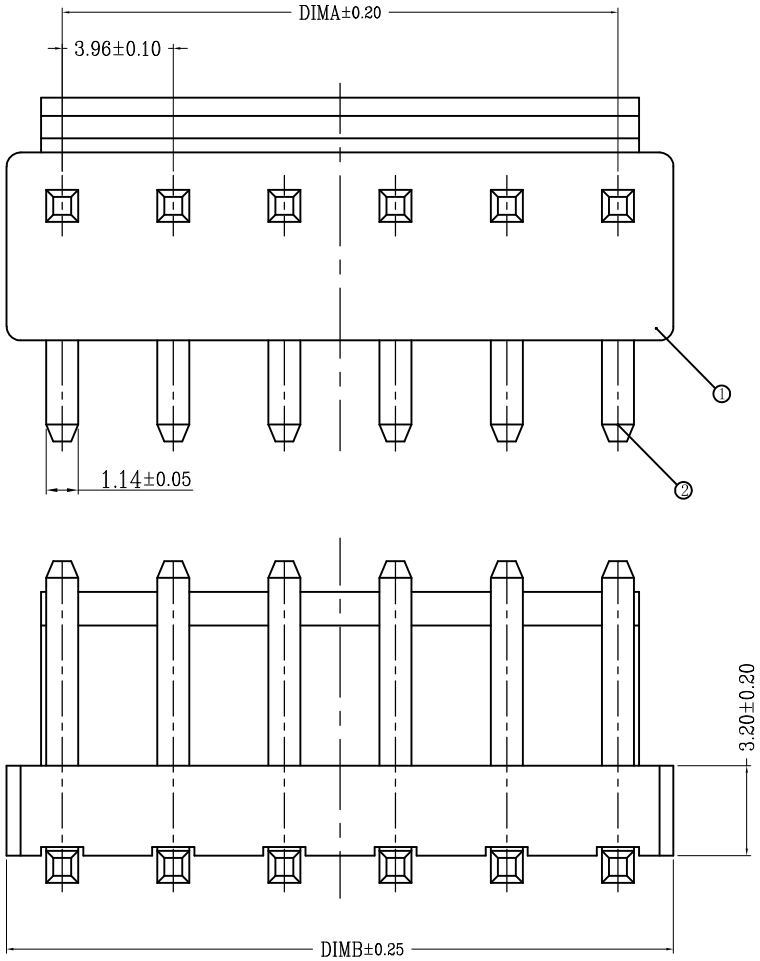

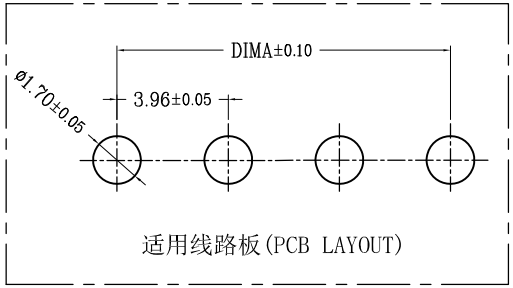

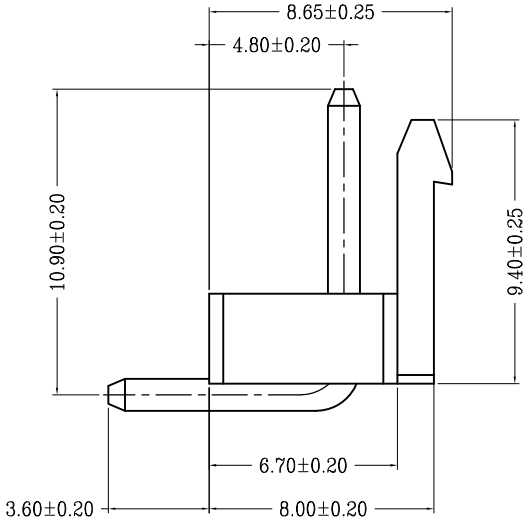

技术指标(Technical Index):

1. 温度范围(Temperature range): -25° C～+85° C.
2. 额定电压(Rated voltage): 250V, AC,DC.
3. 额定电流(Rated current): 7.0A AC,DC.
4. 接触电阻(Contact resistance): ≤20mΩ .
5. 耐压值(Withstanding voltage): 1500V AC/minute.
6. 绝缘电阻(Insulation resistance):≥1000MΩ.
7. 产品料号(Product material No.):

CKT	A	B
2	3.96	7.92
3	7.92	11.88
4	11.88	15.84
5	15.84	19.80
6	19.80	23.76
7	23.76	27.72
8	27.72	31.68
9	31.68	35.64
10	35.64	39.60
11	39.60	43.56
12	43.56	47.52
13	47.52	51.48
14	51.48	55.44
15	55.44	59.40
16	59.40	63.36

REV	DATE	MODIFICATION DESCRIPTION	CHANGE

OPERATION	
X.X	±0.30
X.XX	±0.20
X.XXX	±0.10
Angle	±3°
DIM	TOL

DRAW
CHECK
APPROVE

SCALE	FIT
UNIT	mm
SIZE	A4
SHEET	1/1
PROJ.	

深圳市连盛精密连接器有限公司

PART NO.	1130500025
TITLE:	VH-NAW 低弯