RoHS

SPECIFICATIONS
Rated Current:3.0AMP
Contact Resistance:20mΩ Max
Withstand Voltage:1000V AC/DC
Insulation Resistance:1000MΩ Min
Operation Temperature:−40°c to +105°c

Contact Material:Brass
Contact Plating:Au Over Ni
Insulator Material:Polyester(UL94V−0)
Standard: PA6T
Max.Processing Temp: 230°C for 30−60 seconds
(260°C for 10 seconds)

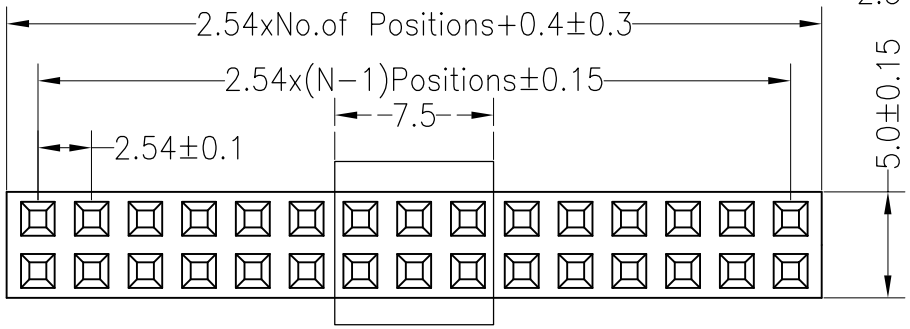

Recommended P.C.B Layout(Top Side)
(PCB BOARD TOLERANCE±0.05)

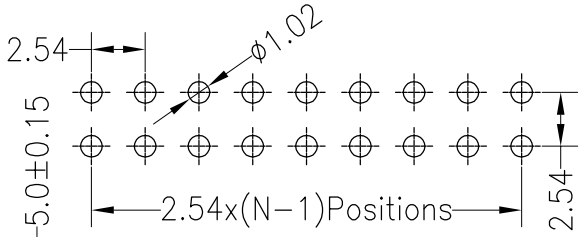

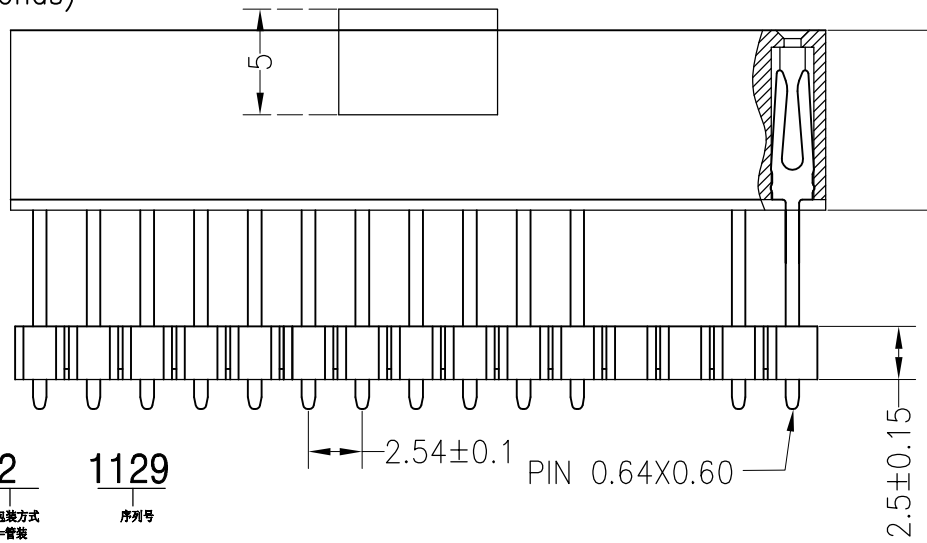

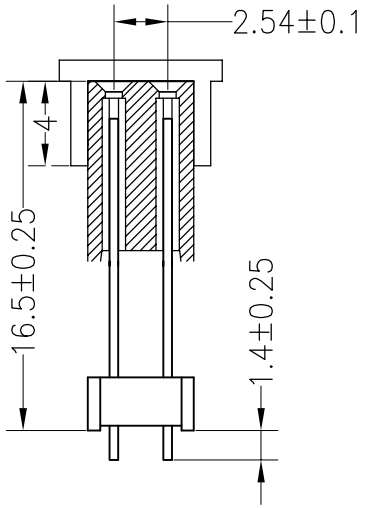

Ordering Information

F	3	N	2	15	1	5	01	2	1129
产品类型 F=排母	间距 3=2.54	塑胶高度 N=8.5	排数 2=双排	单排PIN数 1~40P	产品形态 1=DIP	塑胶材料 5=PA6T	电镀厚度 00=常规 01=1u" 02=2u" 03=3u"	包装方式 1=管装 2=卷装 3=盘装 4=袋装 5=盒装	序列号

REV	DATE	MODIFICATION DESCRIPTION	CHANGE
A0	2012.10.08	NEW DRAWING	

OPERATION				
X.X	±0.30	DRAW		
X.XX	±0.20	CHECK		
X.XXX	±0.10			
Angle	±3°	APPROVE		
DIM	TOL			

SCALE	FIT
UNIT	mm
SIZE	A4
SHEET	1/1
PROJ.	

深圳市连盛精密连接器有限公司

PART NO.	1020300716
TITLE:	2.54FH 2H=8.5+2.5 W=5.0 2*15P(空第23-26P) DIP PB16.5 PC1.4 L=17.0 Y型 PC104 AU1U 青铜 PA6T 加盖卷装