52F-31880111101

52F SERIES PCB JACK
(52F系列PCB接口)
CONTACTS(金针根数):
8-8CONTACTS(8C)
PEG/TAB(边定位铁脚):
1-FRONT PEG3.05(前脚3.05)
PLASTIC(塑料):
1-PBT;
2-NYLON66(尼龙66) ;
3-NYLON46(尼龙46)
COLOR(颜色):
1-BLACK(黑色);5-YELLOE(黄色);
6-RED(红色);8-BLUE(蓝色)
GOLD PLATING(镀金厚度):
1-FU";2-1.5U";3-3U";4-6U";
5-15U";6-30U";7-50U"

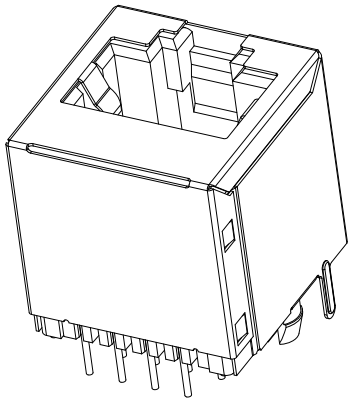

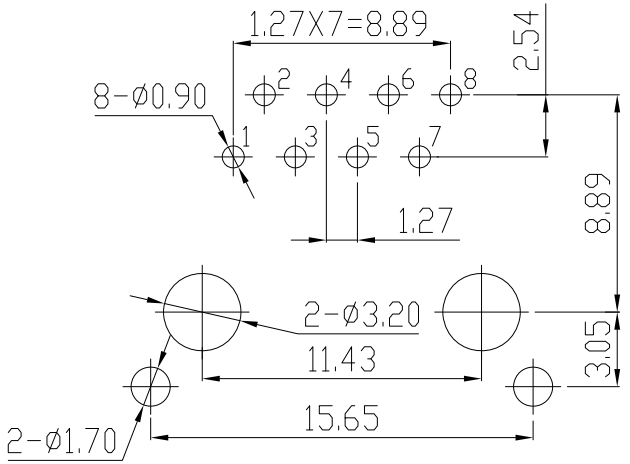

PC Board Layout

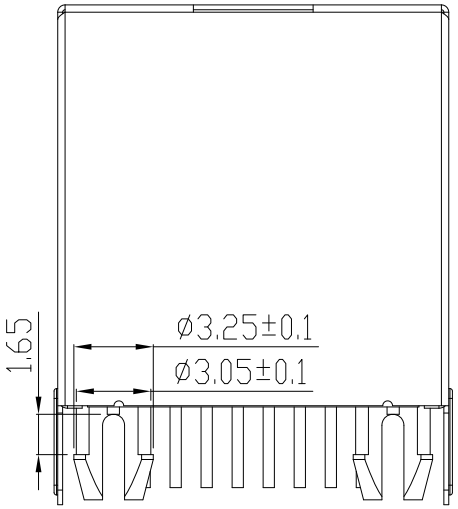

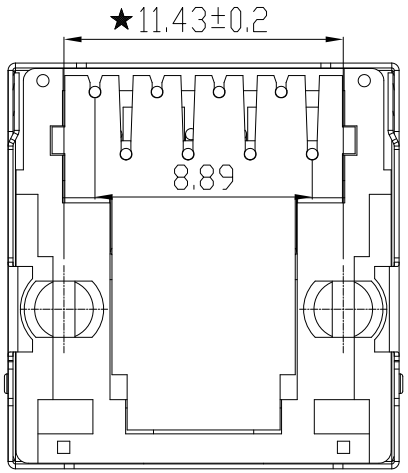

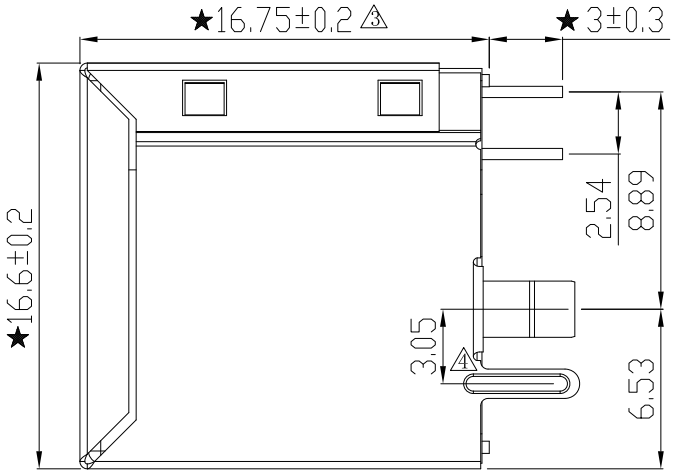

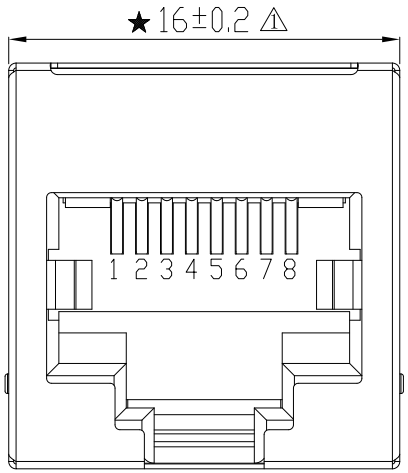

NOTES:
ELECTRICAL:
1. VOLTAGE RATING: 125 VAC RMS.
2. CURRENT RATING: 1.5 AMP.
3. CONTACT RESISTANCE: 30 MILLIOHMS MAX.
4. INSULATION RESISTANCE: 500 MEGOHMS MIN @ 500 VDC.
5. DIELECTRIC STRENGTH: 1000 VAC RMS 50Hz or 60Hz,1MIN.
MECHANICAL:
1. INSERT MATERIAL: UL94V-0.
2. CONTACT MATERIAL: DIAMETER 0.46MM PHOSPHOR BRONZE
GOLD PLATING OVER NICKEL.
3. SHIELD: 0.20MM THICKNESS H65Y BRASS NICKEL PLATED.
4. MATING/UNMATING FORCE: 2.2KG.F MAX.
5. RETENTION STRENGTH: 7.7KG.F MIN BETWEEN JACK AND PLUG.
6. OPERATING LIFE: 750 CYCLES MIN.
ENVIRONMENTAL:
1. STORAGE: -40℃ ～ +85℃ RELATIVE HUMIDITY<70%.
2. OPERATION: -40℃ ～ +85℃.
Remark:
1.The mark with★is the key inspection dimension for QC.

A/4	铜脚增加加强筋	2018.08.15	Tolerances		Tel		1100300017	深圳市连盛精密连接器有限公司			
A/3	按实物更改	2017.12.11			Fax						
A/2	Change the drawings	2016.10.10	.X	±0.25	Draw	Hongqiwu	Name	5224S 1X1 8P8C F3.05			
A/1	按实物更改	2009.11.24	.XX	±0.20	Ch'k	Wangbin	Part Number	52F-31880111101			
A/0	First edition	2007.08.10	.XXX	±0.10	App'd	Xuxiaorong	Type	5224	Figure Number	SC257	
REV	Change Description	Date	Angle	±1°	Units: mm		Mt'l:(Attach)	View:	Scale: 1:1		