RoHS

SPECIFICATIONS
Rated Current:3.0AMP
Contact Resistance:20mΩ Max
Withstand Voltage:1000V AC/DC
Insulation Resistance:1000MΩ Min
Operation Temperature:−40°c to +105°c

Contact Material:Brass
Contact Plating:Au Over Ni
Insulator Material:Polyester(UL94V−0)
Standard: PA6T
Max.Processing Temp: 230°C for 30−60 seconds
(260°C for 10 seconds)

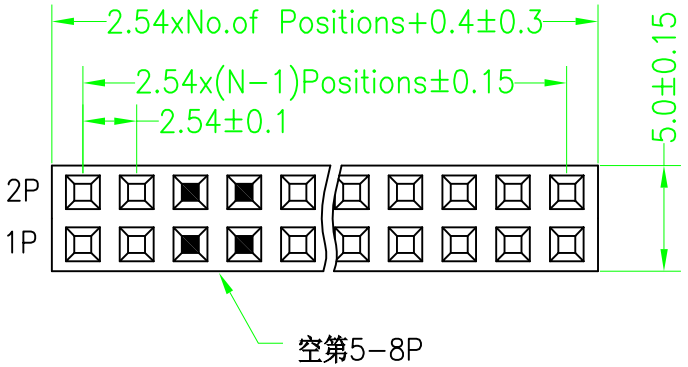

Recommended P.C.B Layout(Top Side)
(PCB BOARD TOLERANCE±0.05)

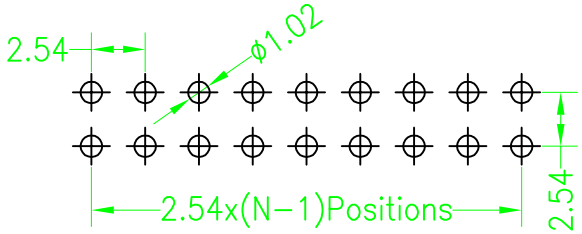

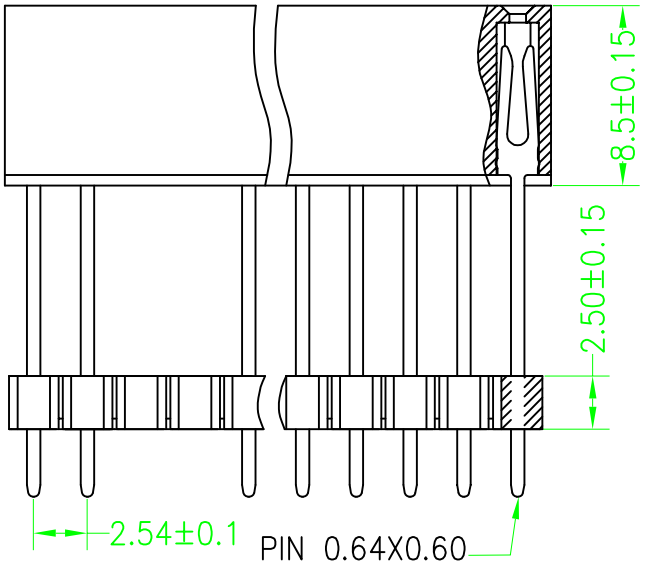

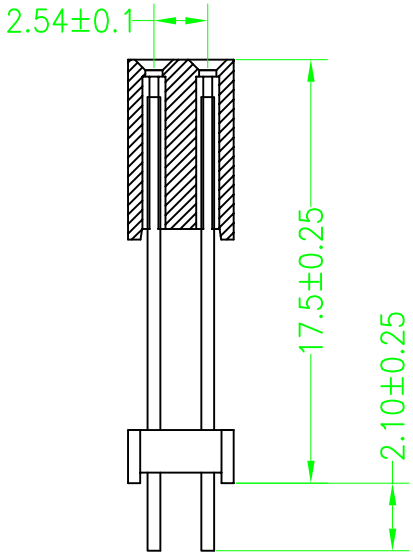

REV	DATE	MODIFICATION DESCRIPTION	CHANGE
A0	2012.10.08	NEW DRAWING	

OPERATION					
DRAW			X.X	±0.30	
CHECK			X.XX	±0.20	
			X.XXX	±0.10	
APPROVE			Angle	±3°	
			DIM	TOL	

SCALE	FIT
UNIT	mm
SIZE	A4
SHEET	1/1
PROJ.	

深圳市连盛精密连接器有限公司

PART NO.	1020300153
TITLE:	2.54FH 2H=8.5+2.5 2x13pin 180° PC104 空第5−8P