Process Capable

RoHS Compliant 2011/65/EU

Compliant Halogen Free

REV.	ECN NO.	DESCRIPTION	DATE	DESIGN

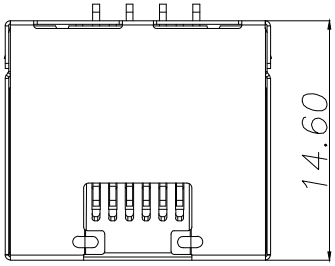

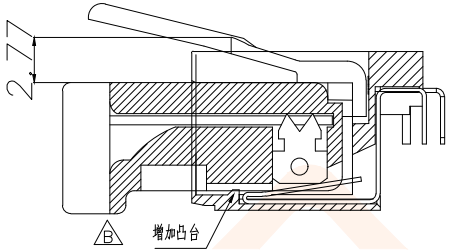

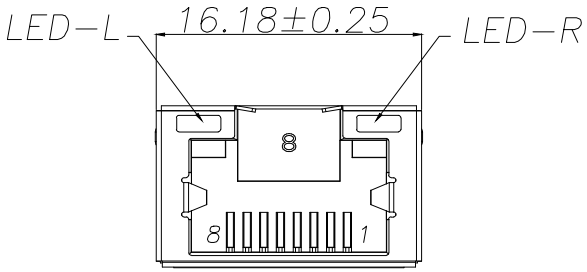

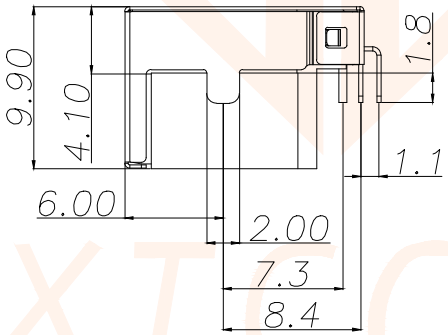

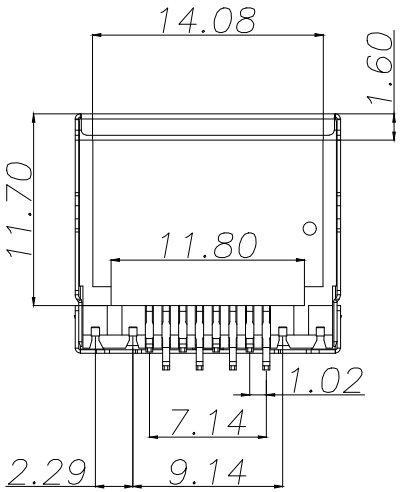

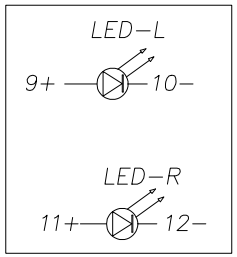

NOTES

MATERIAL
1.HOUSING MATERIAL: LCP BLACK UL94V-0.
2.CONTACT MATERIAL: PHOSPHOR BRONZE .
3.PLATING: GOLD FLASH PLATING OVER NICKEL.
4.SHIELD: COPPER ALLOY
WITH NICKEL PLATED.
5.LED: TIN PLATED.

ELECTRICAL
1.VOLTAGE RATING: 125 VAC RMS.
2.CURRENT RATING 1.5 AMP.
3.CONTACT RESISTANCE: 40 MILLIOHMS MAX.
4.INSULATION RESISTANCE: 500 MEGOHMS MIN @ 100V DC .
5.DIELECTRIC DIELECTRIC
RESISTANCE: 500V DC RMS 50Hz. 1MIN.

MECHANICAL
1.DURRABILITY: 750 CYCLES MIN.
2.MATING/UNMATING FORCE: 2.24 KG.F MAX.

ENVIRONMENTAL:
1.STORAGE: -40℃~+85℃.
2.OPERATION: -40℃~+85℃.

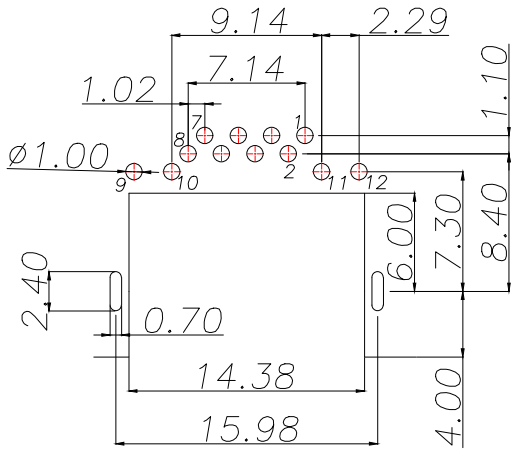

PCBLAYOUT
TOL:±0.05

TOLERANCE		深圳聚兴泰电子科技有限公司 Shenzhen Juxingtai Electronic Technology Co., Ltd		
X.:±0.35	X.°:±3°	PART NO. RJ45-5031-8P	TITLE: RJ45 9.9H 沉板5.8 DIP 带灯	
X.X:±0.25	X.X°:±2°			
X.XX:±0.15	X.XX°:±1°			
UNITS	mm	DESIGN: Ethan	MANUFACTURE DWG	
MATERILA	— — —	CHED: Olvia	SCALE	SHEET
FINISH	— — —	APPD: Ava	N:A	1/1

JXTCONN