REVISIONS					
REV.	ECN NO.	LOCATION	DESCRIPTION	DATE	DESIGN
A0	N/A		INITIAL RELEASE	/	/
A1	N/A		图面升级整理图面	2024.11.19	桑 甚

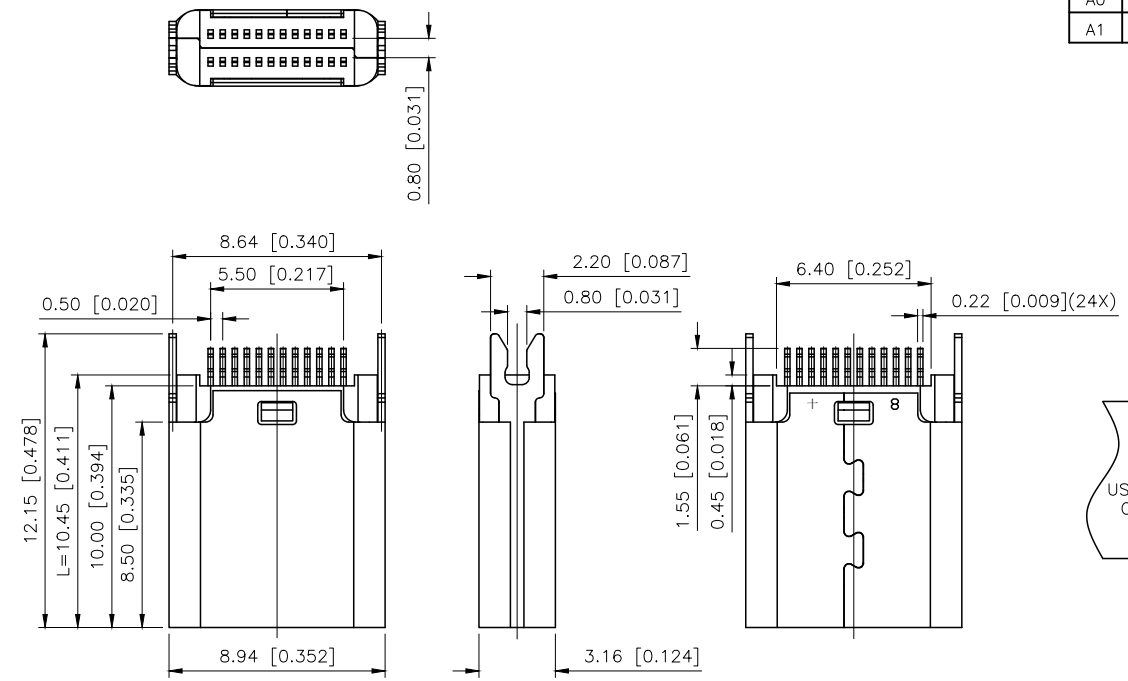

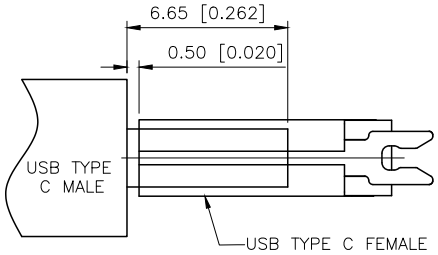

AFTER ASSEMBLY

规格 Specifications:

1.电气特性:Electyical:

额定电压 Voltage rating:5V DC/AC

额定电流 Current rating:

5A for VBUS/GND pins

1.25A for CC pin

0.25A for all other contact.

绝缘电阻 Insulation resistance:100MΩ Min

接触电阻 Contact resistance:40mΩ/pin Max

Shield: 50mΩ/MAX.

LLCR Max. change of all pins: 10mΩ.

耐电压 Withstanding voltage:100V AC/minute

2.机械特性:Mechanical:

寿命 Durability: 10000 cycles Min

插入力 Connector Insertion forces: 0.5~2.0Kgf

拔出力 Connector unmating forces: 0.8~2.0Kgf

工作温度 Temperature range:-40℃to+85℃

U263-24XN-4BVC01

1:Au 1u"
2:Au 3u"
3:Au 15u"
4:Au 30u"

1:PBT
2:PA6T
3:PA9T
4:LCP

W:WHITE
B:BLACK

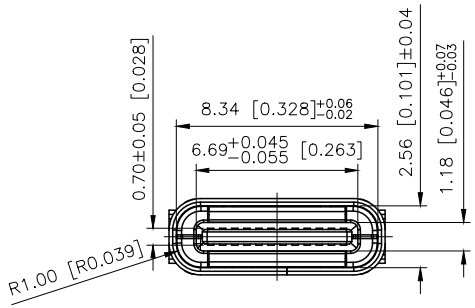

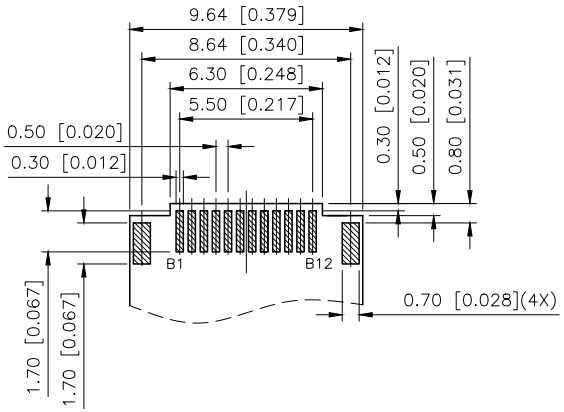

BOTTOM VIEW

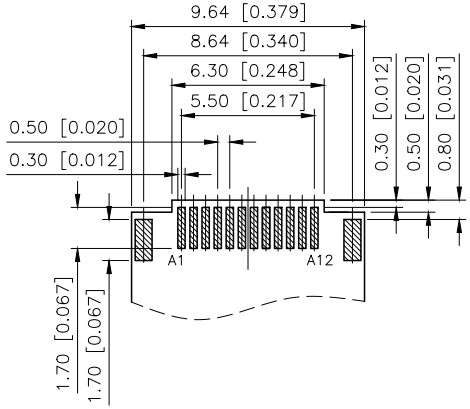

RECOMMENDED PCB LAYOUT(TOP VIEW)
THICKNESS 0.80±0.05MM;DEFAULT TOLERANCE:±0.05

Pin Assignments

A1	GND	B12	GND
A2	SSTXP1	B11	SSRXP1
A3	SSTXN1	B10	SSRXN1
A4	VBUS	B9	VBUS
A5	CC1	B8	SBU2
A6	DP1	B7	DN2
A7	DN1	B6	DP2
A8	SBU1	B5	CC2
A9	VBUS	B4	VBUS
A10	SSRXN2	B3	SSTXN2
A11	SSRXP2	B2	SSTXP2
A12	GND	B1	GND
PIN	SIGNAL NAMF	PIN	SIGNAL NAMF

NO.	DESCRIPTION	MATERIAL	REMARKS
5	EMI PLATE	STAINLESS STEEL	CLEAR ONLY
4	FRONT SHELL	STAINLESS STEEL	Ni PLATED
3	MID PLATE	STAINLESS STEEL	CLEAR ONLY
2	TERMINAL	COPPER ALLOY	Au PLATING ON CANTACT AREA; Tin PLATING ON SOLDER TAIL,NI 50u" UNDERPLATING OVERALL
1	HOUSING	LCP,UL94 V-0	BLACK

AuGLAR	±5°
X.	±0.40
X.x	±0.30
X.xx	±0.20
X.xxx	±0.15
UNSPECIFIED TOLERAuCES	

XKB Connection

XKB INDUSTRIAL PRECISION CO.,LIMITED

DESIGN	桑 甚	VIEW:	MODEL TYPE: USB TYPE-C
CHECKED		UNIT: mm/in	PART NO.: U263-24XN-4BVC01
APPROVED		SIZE: A4	DWG NO.:

SCALE	PAGE	REVISION
N/A	1/1	A1

www.helloxkb.com www.helloxkb.cn www.xk-dg.cn