由 Autodesk 教育版产品制作

Specifications

备注(Remark)
1.材料(MATERIAL)
胶芯：PA9T+30%G.F UL94V-0，颜色:黑色.
Housing:PA9T+30%G.F UL94V-0,Color:Black
端子：磷铜，镍底30u"MIN,表面镀普金
Contact:Phosphor,GOLD PLATING OVER ALL
30u" MIN NICKEL UNDERPLATING OVER ALL
2.特性 (characteristics):
额定电流：1 AMP
Raring Current:1 AMP.
接触阻抗：20 mΩ MAX.
Contact Resistance:20 mΩ MAX.
绝缘阻抗：1000 MΩ MIN.
Insulating Resistance:1000 MΩ MIN.
耐电压：AC 500V/分钟.
Withstanding Voltage:AC 500V/Minute.
温度范围：-40° C to+105° C
Temperture Range: -40° C to+105° C

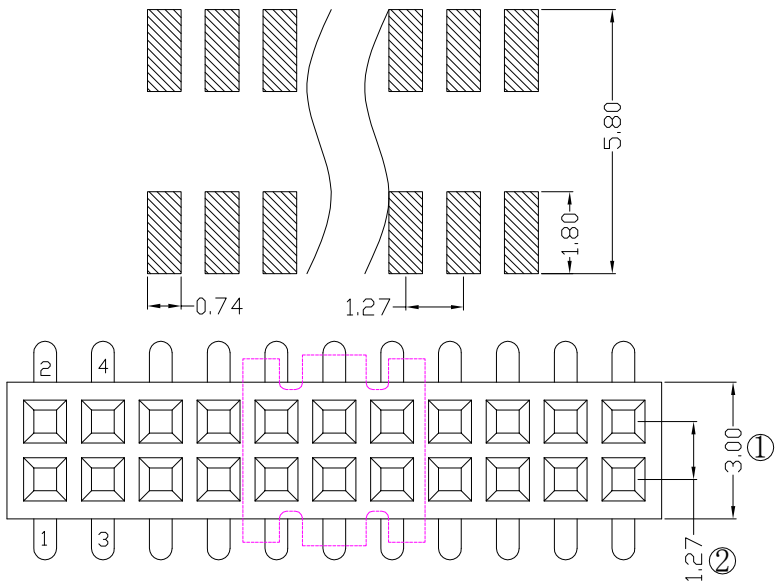

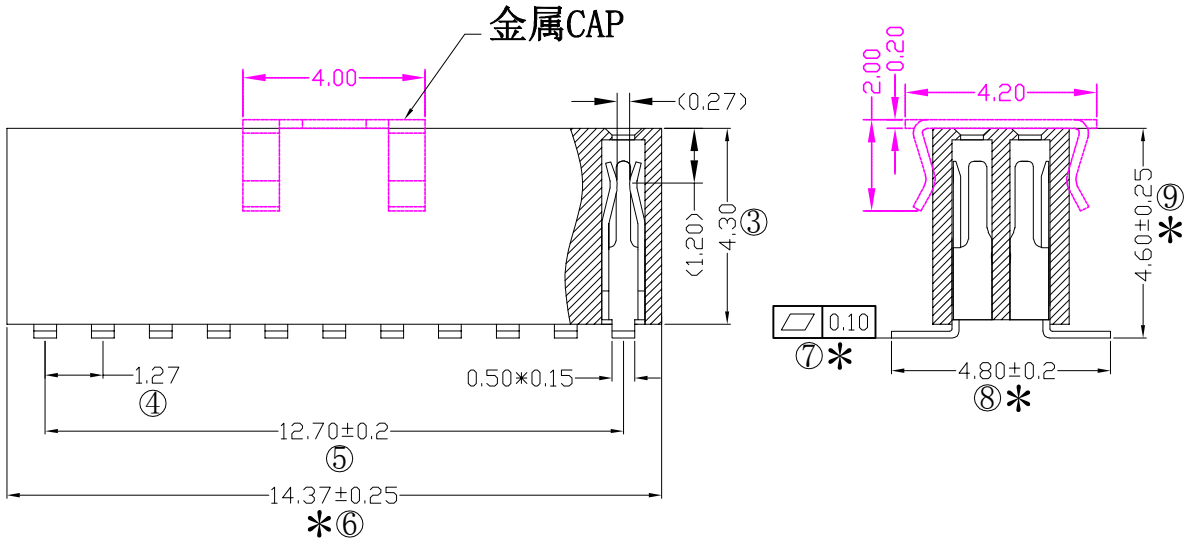

Ordering Information

F343-12 11 A0 C MU B 1

NO.OF PINS PER ROW	Contact Plating Full Of Gold	Contact Plating Semi-gold	INSULATOR MATERIAL:	PACKING
2~50P	A0=0.8u"	B0=0.8U'	B: PA6T	A: PE Bag
	A1=1u"	B1=1U'	C: PA9T	B: Tape & Reel
	A2=1.5u"	B2=1.5U'	D: LCP	C: Tube
	A3=2u"	B3=2U'		D: Tube+CAP
	A4=3u"	B4=3U'		E: Tray
	A5=5u"	B5=5U'		
	A6=10u"	B6=10U'		
	A7=15u"	B7=15U'		
	A8=20u"	B8=20U'		
	A9=30u"	B9=30U'		
	S1=Ordinary Tin Plated			
	S2=Matte Tin Plated			
	S3=Tin-plated High-temperature			

RoHS COMPLIANT

客编：

注意事项

1.带*为品质重点检验尺寸

				OPERATION		SCALE	Fit	Yxcon 东莞市宇熙精密连接器有限公司 www.yxcon.com Dongguan Yuxi Electronic Co.,Ltd.		
				X.X	±0.25	UNIT	MM			
				X.XX	±0.20	SIZE	A4	DESIGN	刘伟 2021.07.05	PART NO.	F343-1211A0CMUB1
				X.XXX	±0.10						
A0	2021.07.05	/	新版发行	Angle	±3°	SHEET	1/2	CHECK		TITLE:	1.27排母 4.3mm塑高 2*11P SMT U型 PA9T料 镀普金 卷装1000PCS+金属CAP夹口2.9-2.95
REV	DATE	SYMBOL	MODIFICATION DESCRIPTION	DIM	TOL	PROJ.		APPROVE		Customer No.	

由 Autodesk 教育版产品制作