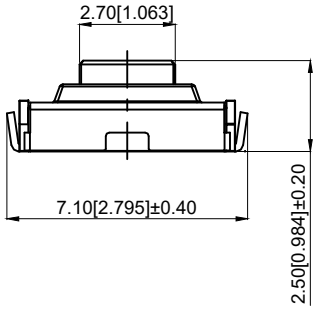

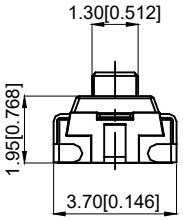

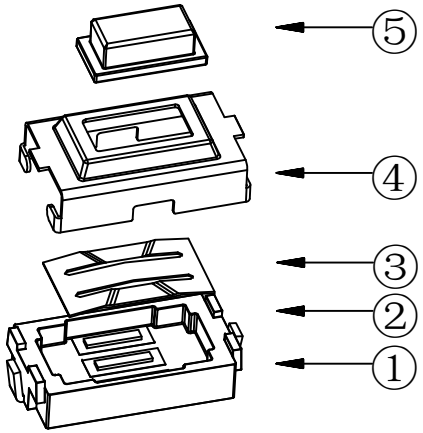

NOTES:
1.Rating:12VDC 50mA
1.额定值：12VDC 50mA
2.Dielectric Strength:250V AC
2.耐电压：250V AC
3.Contact Resistance:≤100mΩ Max
3.接触电阻：≤100mΩ
4.Insulation Resistance:≥100MΩ
4.绝缘电阻：≥100MΩ
5.Operating Force:160±50gf
5.操作力：160±50gf
6.Life：30,000 times
6.寿命：30,000 times
7.Travel：0.20±0.1mm
7.行程：0.20 + 0.1mm
8.Operating Temperature:-20 to +80℃
8.使用温度：-20 to +80℃

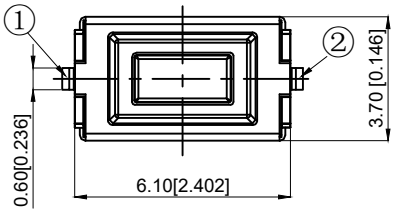

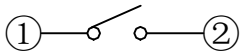

CIRCUIT DIAGRM
电路图

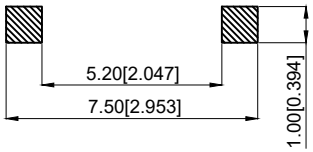

PCB WELDING DRAWING
PCB 焊接图

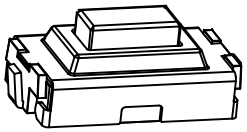

NO 序号	Part name 部件名	Material 材料	QTY 数量	Remark 备注
5	Button 按钮	PAA	1	Red 红色
4	Cover plate 盖板	SUS	1	
3	Shrapnel 弹片	SUS	1	Ag plating 镀银
2	Pedestal 基座	PPA	1	Black 黑色
1	Terminal 端子	Brass	4	Ag plating 镀银

REV	DATE	REVISION DESCRIPTION	ISSUE
A4			
A3			
A2			
A1			

台普 ROCPU

COMMON TOLERANCE	
X.XX	± 0.10
X.X	± 0.15
X	± 0.25
ANGULAR	——

UNIT	MM	PROJCTED		PRODUCT NAME:
DRAWN BY	FUYUAN	CHECKED BY	COCO	MODEL NO: TP13531625
DATE	2019	APPROVAL B	ALEN	Https: www.rocpu.tw

ROCPU TECHNOLONGY CO.,LTD

Copies are issued in strict confidence and shall not be reproduced or copied,or used as the basic of manufacture or sale of apparatus without permission