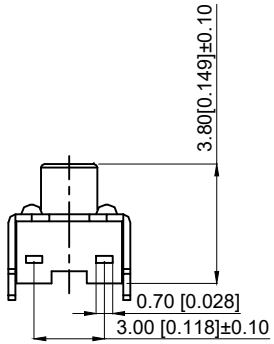

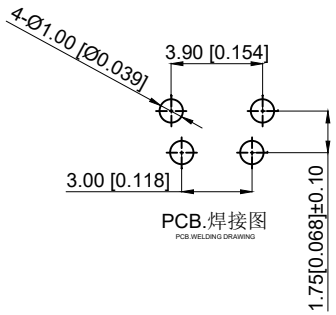

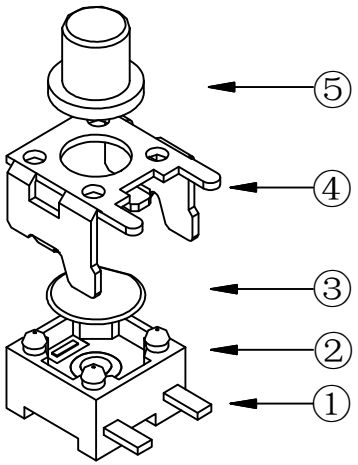

NOTES:
1.R ate voltage：50mA DC12V
1.额定电压：50mA DC12V
2.Contact resistance：≤100mΩ
2.接触电阻：≤100mΩ
3.Operating force：260g±50gf
3.按力：260g±50gf
4.Travel：0.15±0.10mm
4.行程:0.15±0.10mm
5.Insulated resistance:≥100MΩ
5.绝缘电阻：≥100MΩ
6.Dielectric strength:≥250VAC
6.介电强度：≥250VAC
7.life：50000 times
7.寿命：50000次
8.Working temperature:-20℃~80℃
8.工作温度：-20℃~80℃

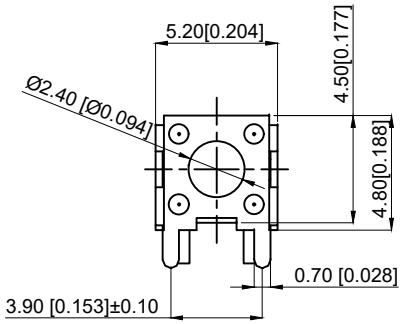

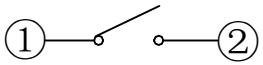

电路图
CIRCUIT DIAGRAM

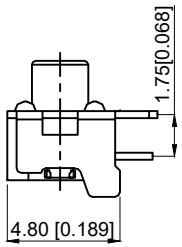

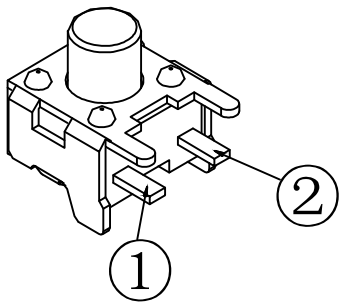

NO 序号	Part name 部件名	Material 材料	QTY 数量	Remark 备注
5	Push-button 按钮	PPA	1	Balck 黑色
4	Blind flange 盖板	Brass	1	Copper tin plating 镀铜锡
3	Shrapnel 弹片	SUS	1	Ag plating 镀银
2	Noumenon 本体	PPA	1	Black 黑色
1	Card 卡件	Brass	1	Ag plating 镀银

REV	DATE	REVISION DESCRIPTION	ISSUE
A4			
A3			
A2			
A1			

台普 ROCPU

COMMON TOLERANCE	
X.XX	± 0.10
X.X	± 0.15
X	± 0.25
ANGULAR	——

UNIT	MM	PROJCTED		PRODUCT NAME:
DRAWN BY	FUYUAN	CHECKED BY	COCO	MODEL NO: TP12812638
DATE	2019	APPROVAL B	ALEN	Https: www.rocpu.tw

ROCPU TECHNOLONGY CO.,LTD

Copies are issued in strict confidence and shall not be reproduced or copied,or used as the basic of manufacture or sale of apparatus without permission