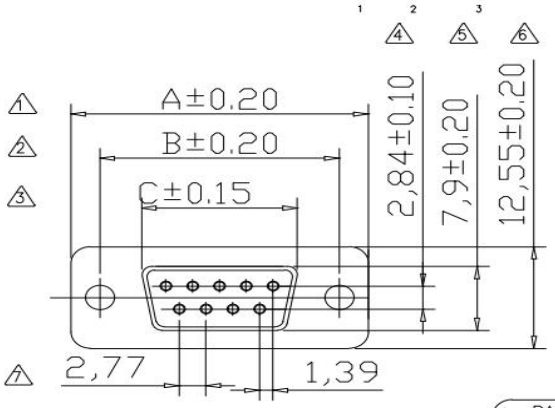

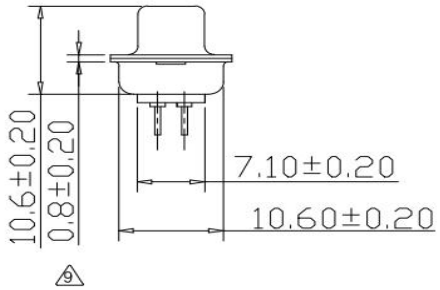

NOTES:
INSULATION RESESTANCE(MIN.): 1000MOHMS
CURRENT RATING(MAX.): 3amp AC/DC
WITHSTANDING VOLTAGE: 1000VAC
CONTACT RESISTANCE(MAX.)30m chms
OPERATION TEMPERATURE: −55°~+105°
MATERIAL:
CONTACT: BRONZE
INSULATION: PBT+30%GLASS FIBER.UL 94V−0
SHELL; STEEL
NOTICE: THE DIMENSION MAKED WITH " * "
MUST BE CONTROLLED BY QC.

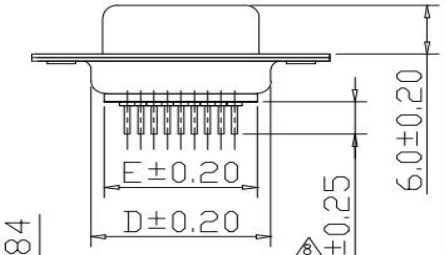

PARTS DIMENSION TABLE

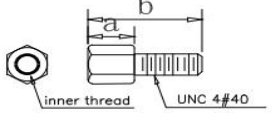

parts no.	DIM. a	DIM. b	inner thread
1	4.8	11.8	4#40
2	5.8	12.0	4#40
3	4.8	11.8	M3
4	5.8	11.8	M3
5	4.8	11.8	M2.6
6	5.8	12.0	M2.6
7	6.0	12.0	4#40

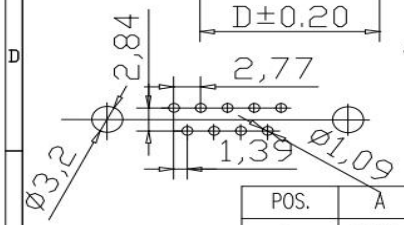

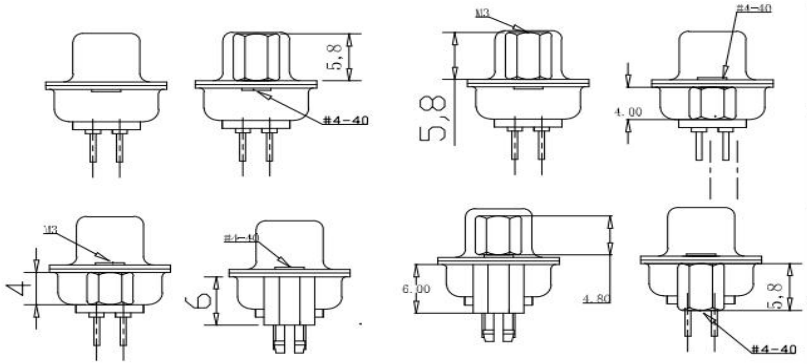

POS.	A	B	C	D	E	G
9	30.80	24.99	16.34	19.00	15.60	4.0/4.6
15	39.20	33.32	24.76	27.70	24.60	4.0/4.6
25	53.05	47.04	38.33	41.10	38.10	4.0/4.6
37	69.50	63.50	54.89	57.30	54.30	4.0/4.6

UNLESS TOLERANCE

GENERAL		ANGLE	
X.	± 0.30	X.°	± 3°
.X	± 0.25	.X°	± 2°
.XX	± 0.20	.XX°	± 1°
.XXX	± 0.15	.XXX°	± 0.5°

DRAW BY:	HANK	2022.05.28
DESIGN BY:	HANK	2022.05.28
CHECK BY:		
APPROVE BY:		
SCALE	SHEET	UNIT
1:1	1/1	mm

东莞市赢海电子有限公司

PAPT NO: C970240

ITEM : GDP15F-180

DRW NO: HP20220531 REV: 1.3