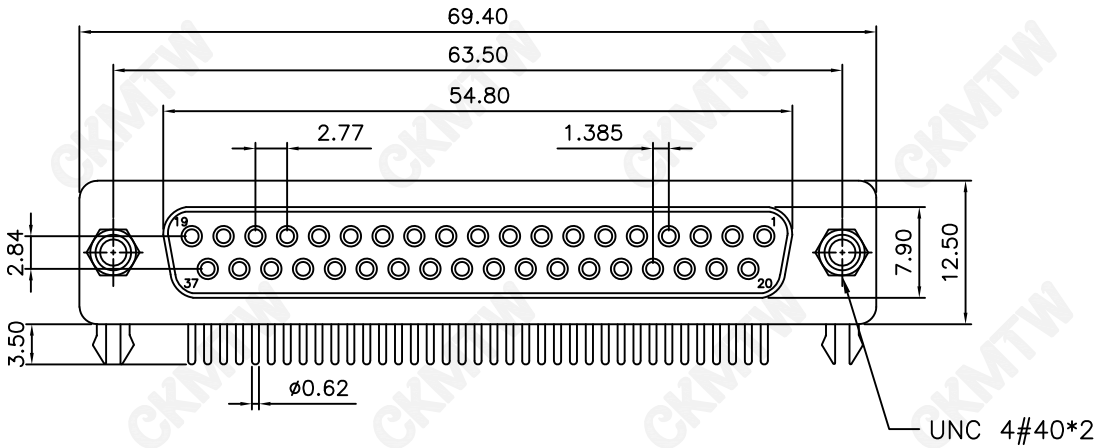

SPECIFICATION
MATERIAL & FINISHES
INSULATOR: PBT GLASS FILLED UL94V-0
CONTACT: BRASS
SHELL : STEEL
PLATING : CONTACT GOLD FLASH PLATED

ELECTRICAL
Operation voltage: 250 VAC max.
Current rating: 3 Amps max.
Contact resistance: 15 mohms max.
Insulation resistance: 3000 Mohms min @ 500 VDC
Dielectric withstanding voltage: 1000 VAC / minute
Operating temperature: -55°C TO +105°C

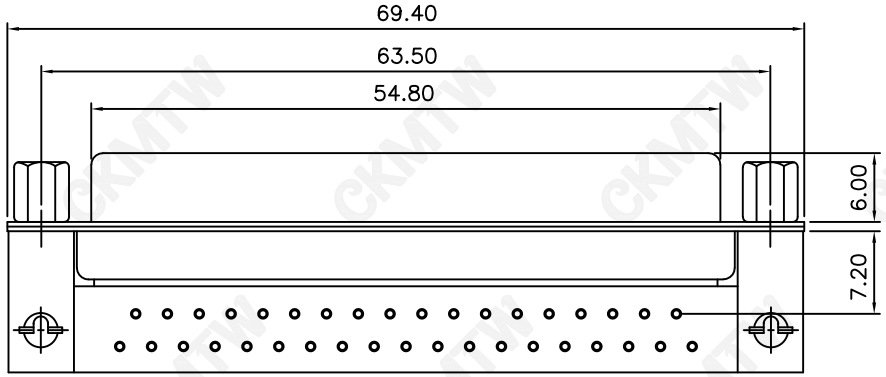

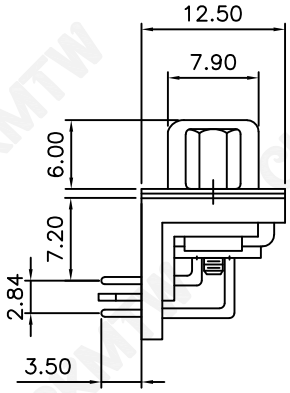

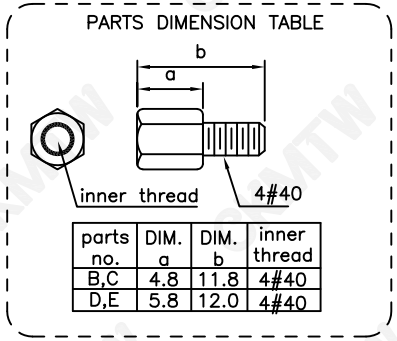

parts no.	DIM. a	DIM. b	inner thread
B,C	4.8	11.8	4#40
D,E	5.8	12.0	4#40

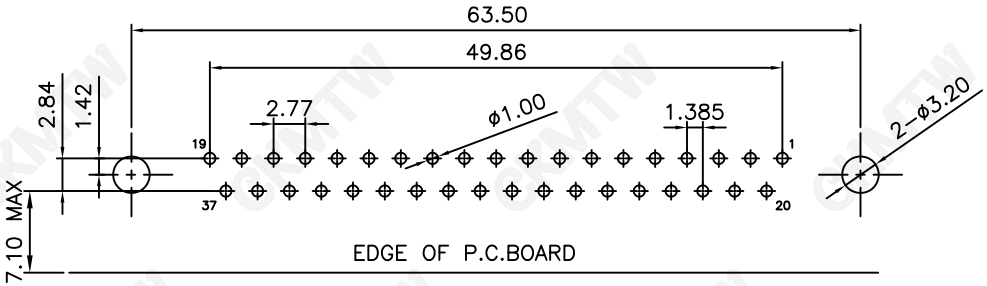

RECOMMENDED P.C.B LAYOUT (TOP VIEW)
TOLERANCES: ±0.10mm

TOLERANCE TABLE	
.0	±0.30
.00	±0.20
.000	±0.05

APPROVED:	DATE:	Ckmtw 深圳市灿科盟实业有限公司 CHANKLEMENT INDUSTRYCO., LTD
CHECKED:	DATE:	TITLE: DMRC-37S 母头 弯插 车针 铆合锁螺丝 全金 折弯7.2 带黑胶挡板
DRAWN: LYF	DATE: 2018-04-07	PART. NO. D-DMRC37PF-E001
		UNIT mm SCALE free
		FILE NO. Ckmtw-DMRC-0009 REV. A