REVISIONS					
REV.	ECN NO.	LOCATION	DESCRIPTION	DATE	DESIGN
A0	N/A		INITIAL RELEASE	/	/
A1	N/A		图面升级整理图面	2024.9.18	阿树

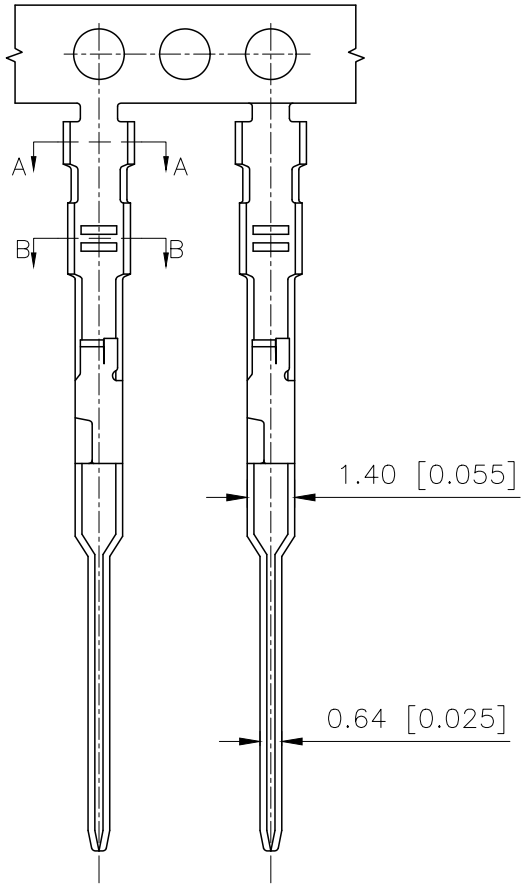

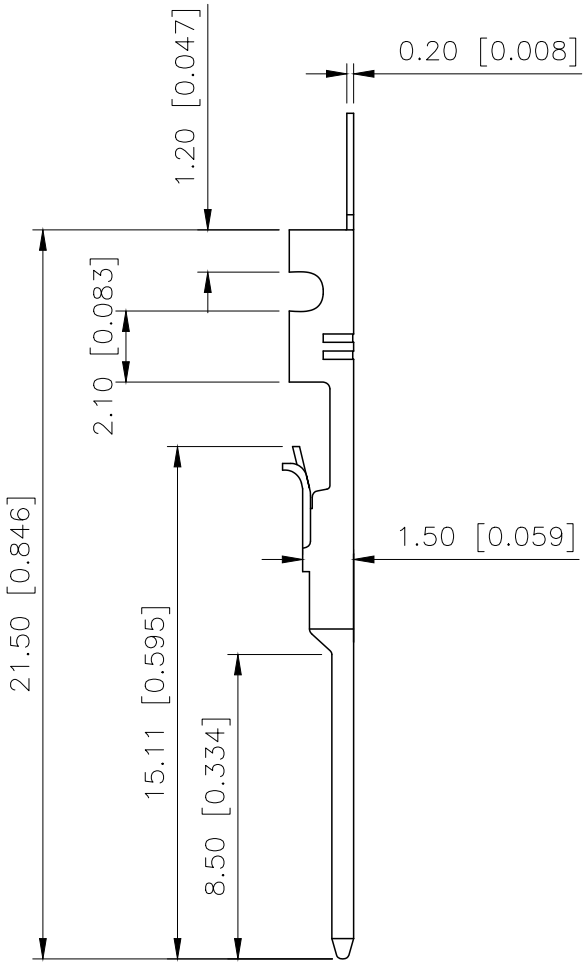

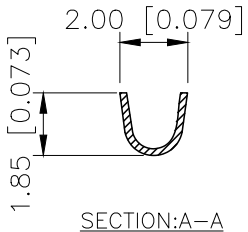

SECTION:A–A
SCALE:1:1

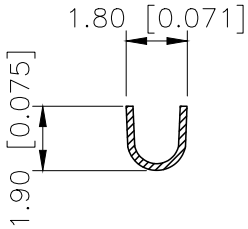

SECTION:B–B
SCALE:1:1

■SPECIFICATIONS
- •Voltage rating:250V AC/DC
- •Current rating:3A AC/DC
- •Withstanding Voltage:1500V AC/minute
- •Temperature range:−40°C~+125°C
- •Insulation resistance:≥1000MΩ
- •Contact resistance:≤20mΩ

PART NO.:

X9556 T M–B SN
① ② ③ ④ ⑤

①Series Number.
②Category: T–terminal
③Welding Board Angle: M–Male
④Material: B–Brass;P–Phosphor copper
⑤Plating Category:SN–Bright Tin Plating

X9556TM–BSN	Brass	AWG#22~26	X9556H
PART NO	Material	Wire Range	Suitable XKB Housing

AuGLAR	±5°
X.	±0.40
X.x	±0.30
X.xx	±0.20
X.xxx	±0.15
UNSPECIFIED TOLERAuCES	

XKB Connection 星城

DESIGN	阿树	VIEW:	MODEL TYPE: 2.54mm Crimp Style Connector
CHECKED		UNIT: mm/in	PART NO.: X9556TM–BSN
APPROVED		SIZE: A4	DWG NO.:

XKB INDUSTRIAL PRECISION CO.,LIMITED

SCALE	PAGE	REVISION
N/A	1/1	A1