REV.	ECN NO.	DESCRIPTION	DATE	DESIGN

Process Capable

RoHS Compliant 2011/65/EU

Compliant Halogen Free

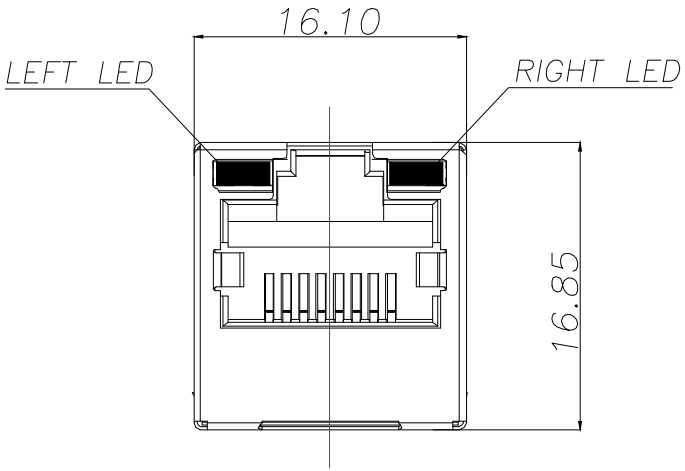

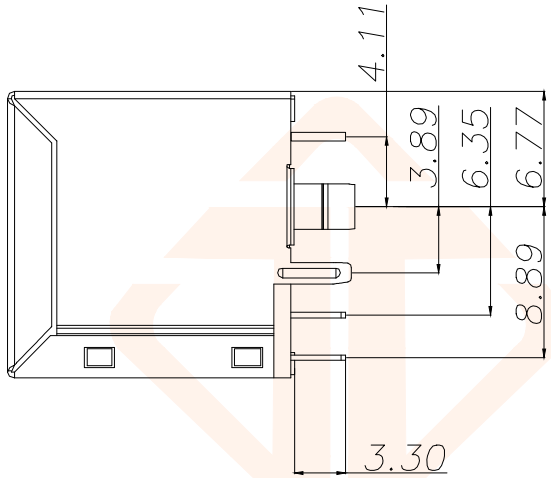

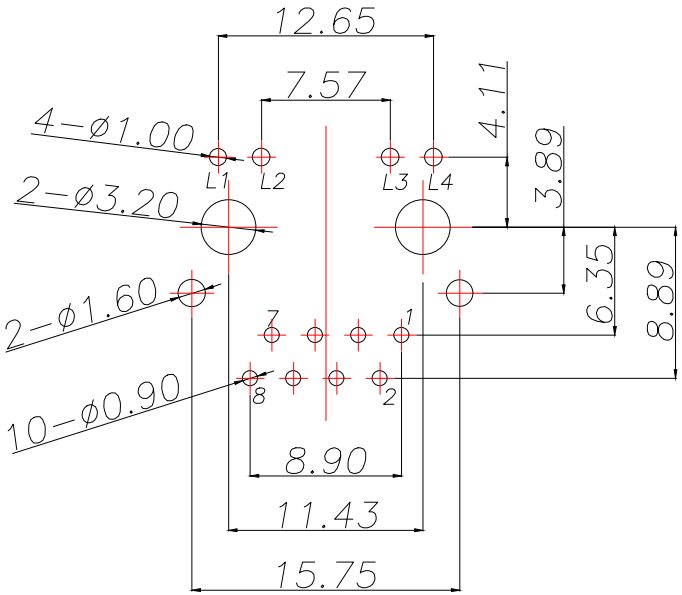

Recommended PCB Layout
(Tolerance:±0.05)

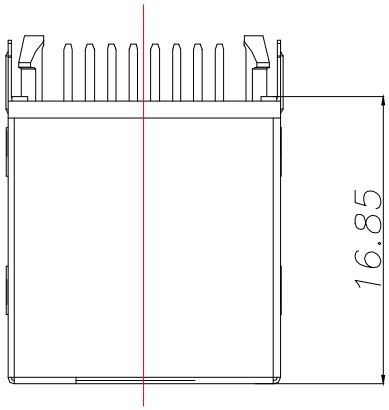

1.Material:
- 1.1 Housing: PBT UL94V-0 Black.
- 1.2 Contact :Phosphor Bronze,Gold plated on contact area 30u".
- 1.3 Input Terminal : Brass.
- 1.4 Metal shielding:Copper alloy with Nickel plated.

2.Environmental requirements:
- 2.1 Lead-free process,compliant RoHS.

TOLERANCE		深圳聚兴泰电子科技有限公司 Shenzhen Juxingtai Electronic Technology Co., Ltd		
X.:±0.35	X.°:±3°	PART NO. RJ45-8052-8P	TITLE: RJ45立式有壳左黄右绿DIP B3.89 100兆30u" PBT	
X.X:±0.25	X.X°:±2°			
X.XX:±0.15	X.XX°:±1°			
UNITS	mm	DESIGN: Ethan	MANUFACTURE DWG	
MATERILA	— — —	CHED: Olvia	SCALE	SHEET
FINISH	— — —	APPD: Ava	N:A	1/1

REV.	ECN NO.	DESCRIPTION	DATE	DESIGN

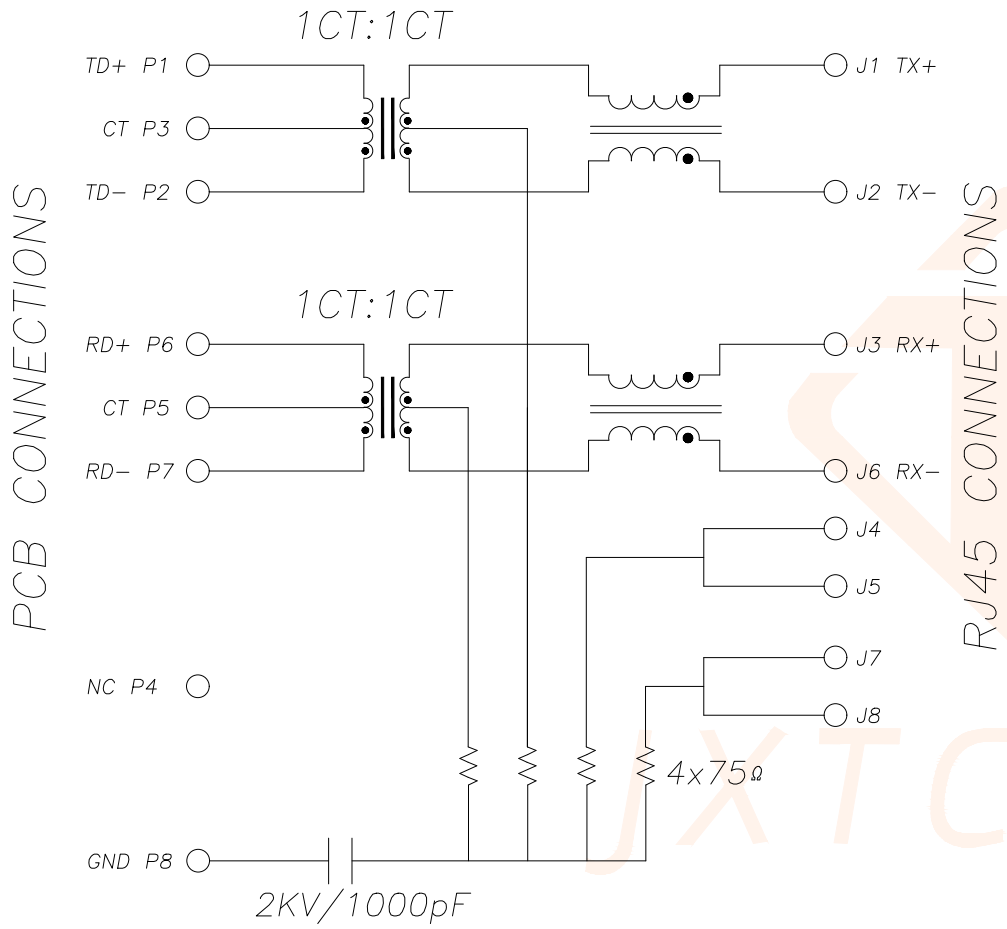

Emitting Color	λp(nm)	Vf@If=20mA
Green	565	1.8−2.5V
Yellow	585	1.8−2.5V

3.Electrical Specification @25°C:
- 3.1 Inductance: 350uH Min With 8mA DC bias.
- 3.2 Insertion loss :
  - 1−100MHZ −1dB max.
- 3.3 Return loss :
  - 1−30MHZ −18dB min.
  - 30−60MHZ −16dB min.
  - 60−80MHZ −12dB min.
- 3.4 Common Mode Rejection:1−100MHZ −30dB min.
- 3.5 Cross Talk:1−100MHZ −30dB min.

4.Operating and Storage Temperature:
- 4.1 Operating Temperature : 0°C to +70°C.
- 4.2 Storage Temperature : −40°C to +85°C.

5.Wave soldering peak temperature:260°C.

TOLERANCE	
X.:±0.35	X.°:±3°
X.X:±0.25	X.X°:±2°
X.XX:±0.15	X.XX°:±1°
UNITS	mm
MATERILA	— — —
FINISH	— — —

深圳聚兴泰电子科技有限公司
Shenzhen Juxingtai Electronic Technology Co., Ltd

PART NO. RJ45−8052−8P	TITLE: RJ45立式有壳左黄右绿DIP B3.89 100μ30u" PBT
DESIGN: Ethan	MANUFACTURE DWG
CHED: Olvia	SCALE N:A / SHEET 1/1
APPD: Ava	