Specifications

备注(Remark)

1.材料(MATERIAL)

胶芯：PA9T+30%G.F UL94V-0，颜色:黑色.

Housing:PA9T+30%G.F UL94V-0,Color:Black

端子：磷铜，镍底30u"MIN,表面镀普金

Contact:Phosphor,GOLD PLATING OVER ALL
30u" MIN NICKEL UNDERPLATING OVER ALL

2.特性（characteristics):

额定电流：1 AMP

Raring Current:1 AMP.

接触阻抗：20 mΩ MAX.

Contact Resistance:20 mΩ MAX.

绝缘阻抗：1000 MΩ MIN.

Insulating Resistance:1000 MΩ MIN.

耐电压：AC 500V/分钟.

Withstanding Voltage:AC 500V/Minute.

温度范围：-40° C to+105° C

Temperture Range: -40° C to+105° C

Ordering Information

F321-12 03 A0 C MU B 4

NO.OF PINS PER ROW	Contact Plating Full Of Gold	Contact Plating Semi-gold	INSULATOR MATERIAL:	PACKING
2~50P	A0=0.8u"	B0=0.8U"	B: PA6T	A: PE Bag
	A1=1u"	B1=1U"	C: PA9T	B: Tape & Reel
	A2=1.5u"	B2=1.5U"	D: LCP	C: Tube
	A3=2u"	B3=2U"		D: Tube+CAP
	A4=3u"	B4=3U"		E: Tray
	A5=5u"	B5=5U"		
	A6=10u"	B6=10U"		
	A7=15u"	B7=15U"		
	A8=20u"	B8=20U"		
	A9=30u"	B9=30U"		
	S1=Ordinary Tin Plated			
	S2=Matte Tin Plated			
	S3=Tin-plated High-temperature			

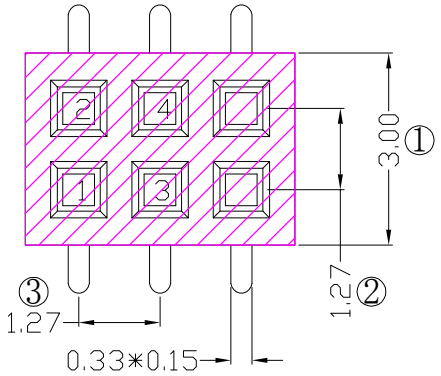

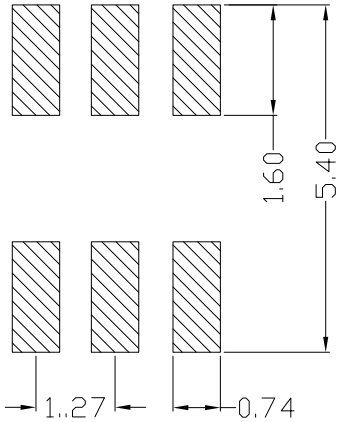

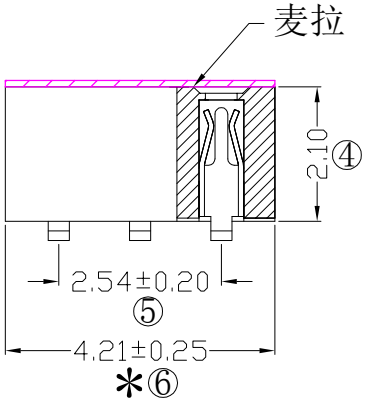

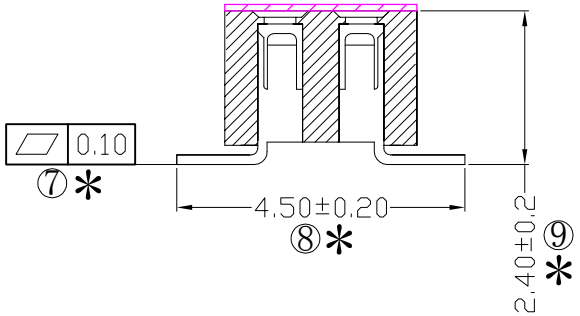

RoHS COMPLIANT

客编：

注意事项

1.带*为品质重点检验尺寸

REV	DATE	SYMBOL	MODIFICATION DESCRIPTION
A0	2021.03.27	/	新版发行

OPERATION		SCALE		Fit	
X.X	±0.25	UNIT		MM	
X.XX	±0.20	SIZE	A4	DESIGN	刘伟 2021.03.27
X.XXX	±0.10	SHEET	1/2	CHECK	
Angle	±3°	PROJ.		APPROVE	
DIM	TOL				

Yxcon 东莞市宇熙精密连接器有限公司
www.yxcon.com Dongguan Yuxi Electronic Co.,Ltd.

PART NO.	F321-1203A0CMUB4
TITLE:	1.27排母 H=2.1mm 2*3P SMT:4.5 U型 PA9T 镀普金 麦拉+卷装
Customer No.	