HAOYU

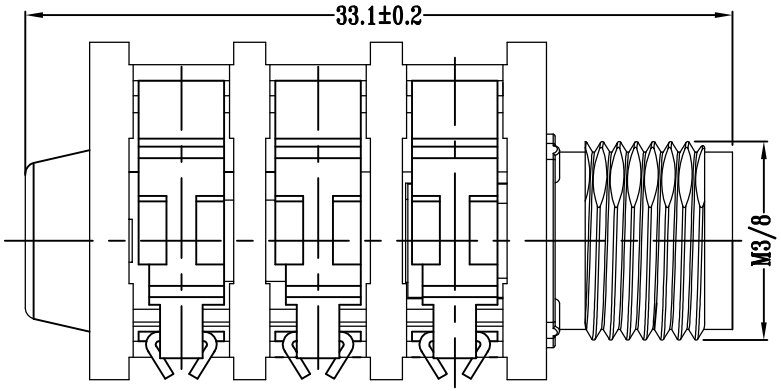

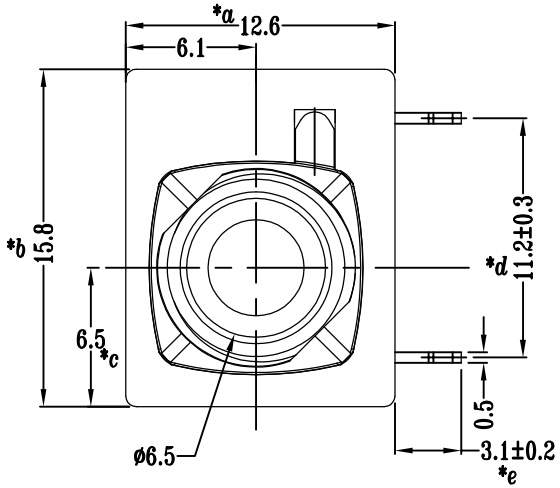

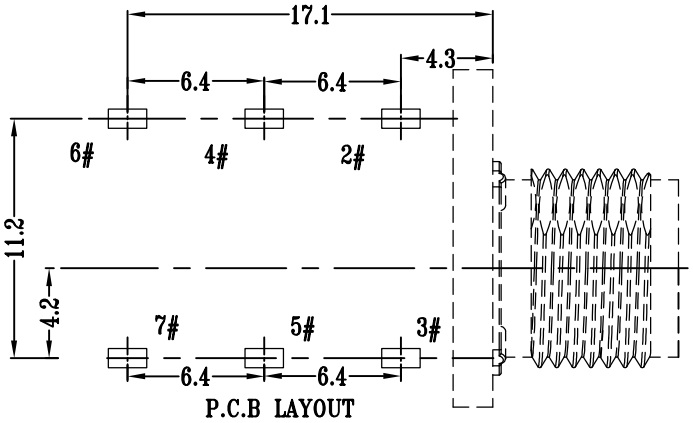

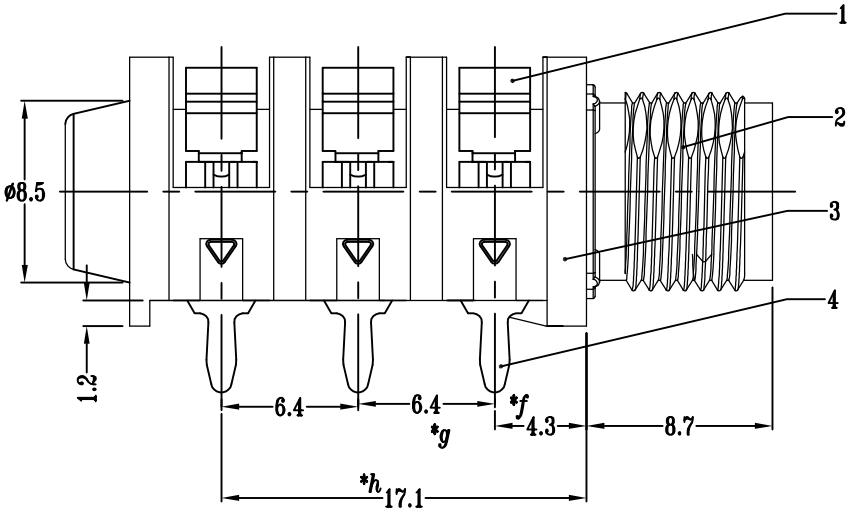

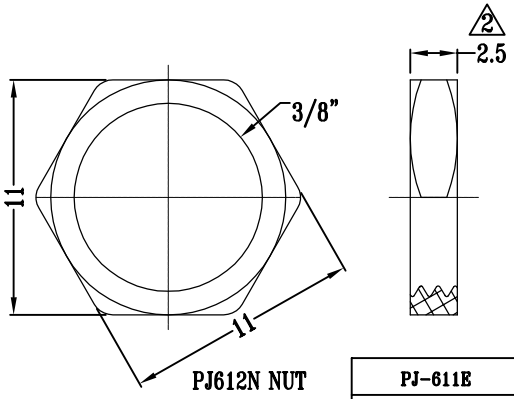

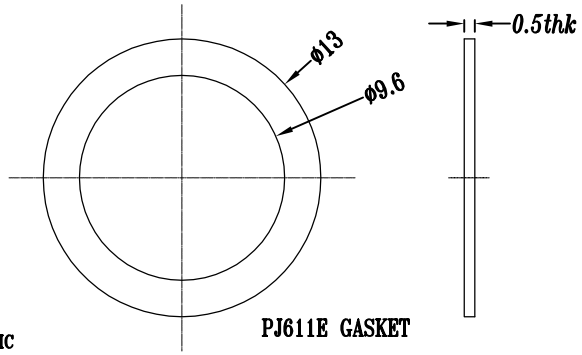

SCHEMATIC

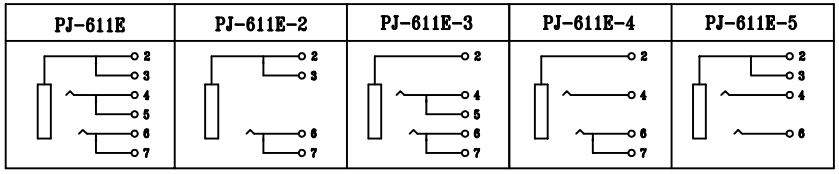

NO.	PART NAME	MATERIAL	QTY	FINISHING
6	PJ611E GASKET	IRON	1	Ni PLATED
5	PJ612N NUT 2	IRON	1	Ni PLATED
4	PJ611E 3#,5#,7#TERMINAL	BRASS	3	Ag PLATED
3	PJ611E CASE	PA66+F.G15%	1	BLACK
2	PJ611E 轴套	锌合金	1	Ni PLATED
1	PJ611E 2#,4#,6#CONTACT	PBS	3	Ag PLATED

TOLERANCE UNLESS SPECIFIED
UP TO 5mm: ±0.1
ABOVE 5mm: ±0.2
ANGULAR ±1°

NO	DATE	REVISIONS	BY	APPD
A2	2020.12.25	2 更新BOM信息	GYW	
A1	2017.11.02	更新系列线路图	GYW	
A0	2017.10.17	更新系列图，新增配件图	GYW	

TITLE: PHONE JACK
MODEL: PJ-611E
UNIT : MM
SCALE: 3:1
ROHS COMPLIANT
DWN
CHK'D
APPD
PRO.AGL:
REV :A2

HOOYA ELECTRONIC CO. LTD
皓宇电子有限公司