| REVISIONS | | | | | |
|---|---|---|---|---|---|
| REV. | ECN NO. | LOCATION | DESCRIPTION | DATE | DESIGN |
| A0 | N/A | | INITIAL RELEASE | 2024.03.25 | 桑 甚 |
| A1 | N/A | | 尺寸变更 | 2024.08.20 | 阿 树 |

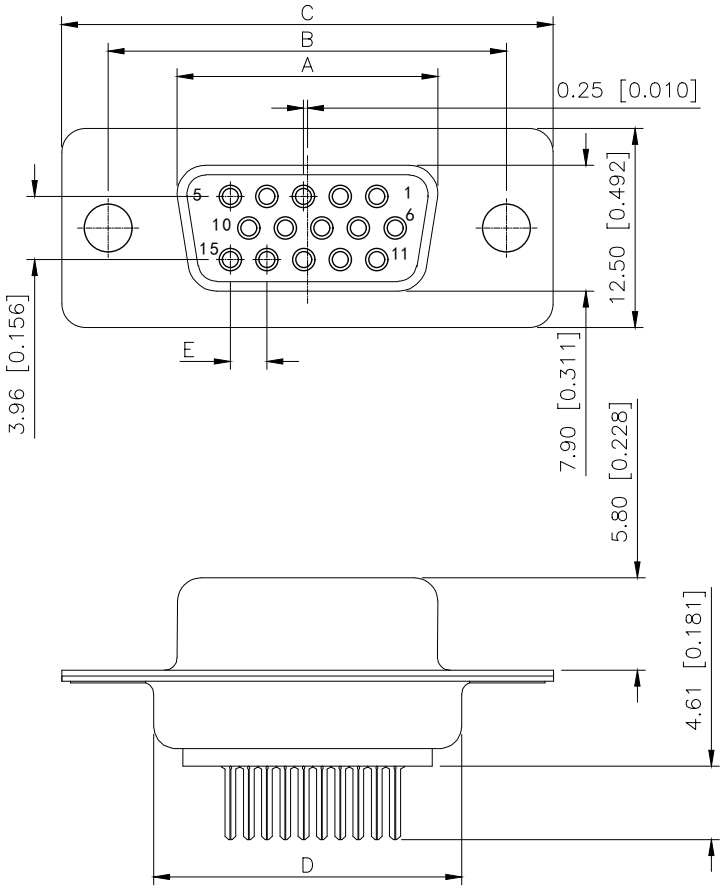


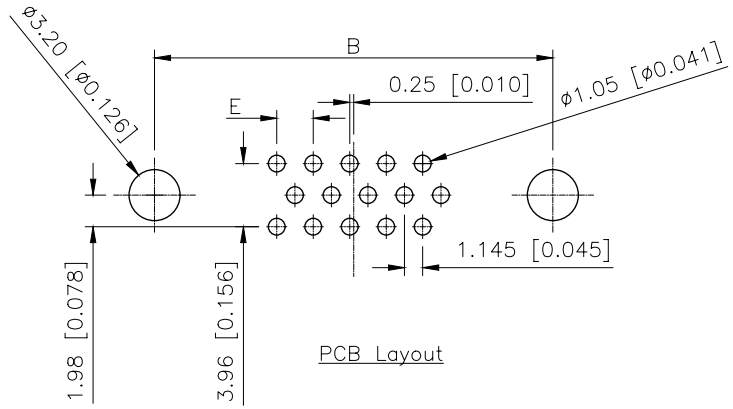


PCB Layout

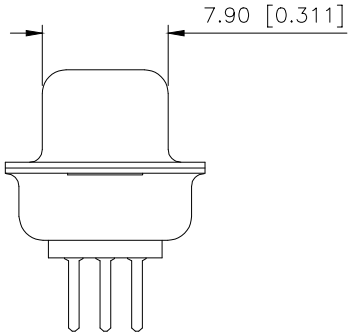


Specifications:
规格：
1.Voltage rating:250VAC/DC
额定电压：250V AC/DC
2.Current rating:3A(T) / 5A(C) AC/DC
额定电流：3A(T) / 5A(C) AC/DC
3.Withstanding voltage:500V AC/minute
耐受电压：≥500V AC/分钟
4.Temperature range: −55℃−+105℃
温度范围：−55℃−+105℃
5.Insulation resistance:1000MΩMIN
绝缘电阻：≥1000MΩ
6.Contact resistance:30mΩMax
接触电阻：≤30mΩ
Materiai:
材料：
7.Rubber core:PBT UL94V−0
胶芯：PBT UL94V−0
8.The iron shell:SPCC Nivkel Plating/
Tin Plating/Gold Plating
铁壳：SPCC,镀镍/镀锡/镀金
B、成品不能有弯针，R角不一致等不良。

PART NO.:

X05 62 F T 7 W 1
① ② ③ ④ ⑤ ⑥ ⑦

① Series No.
② Row No.Pin No.XX−15;26;44;62
③ Welding Board Angle :F−Female
④ T：Tradutional C：Car−pin
⑤ Planting Categotry:
1:1U 2:2U 3:3U 4:5U 5:15U 6:30U 7:AuSn
⑥ Color:B−BLACK W−White BL−Blue
⑦ 1:TYPE−1; 2:TYPE−2; 5:TYPE−5; 7:TYPE−7

| NUMBER OF POSITIONS | DIMENSION | | | | |
|---|---|---|---|---|---|
| | A±0.25 | B±0.13 | C±0.38 | D±0.25 | D±0.05 |
| 15 | 16.35 | 24.99 | 30.80 | 19.28 | 2.29 |
| 26 | 24.75 | 33.30 | 39.20 | 27.65 | 2.29 |
| 44 | 38.35 | 47.04 | 53.50 | 41.28 | 2.29 |
| 62 | 54.75 | 63.50 | 69.40 | 57.71 | 2.41 |

TYPE-1:铆合

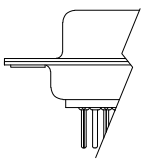

TYPE-2:前铆实心螺母

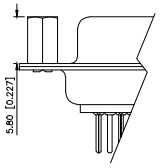


TYPE-7:后铆鱼叉

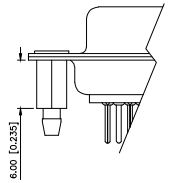


TYPE-5:铆鱼叉锁螺丝

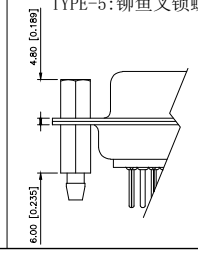


| ANGLAR | ±5° |
|---|---|
| X. | ±0.40 |
| X.x | ±0.30 |
| X.xx | ±0.20 |
| X.xxx | ±0.15 |
| UNSPECIFIED TOLERANCES | |

XKB

| | | | |
|---|---|---|---|
| DESIGN | 桑 甚 | VIEW: | MODEL TYPE: D−SUB |
| CHECKED | | UNIT: mm/in | PART NO.: X0562FT7W1 |
| APPROVED | | SIZE: A4 | DWG NO.: X−X0562FT7W1 |

XKB INDUSTRIAL PRECISION CO.,LIMITED

| SCALE | PAGE | REVISION |
|---|---|---|
| N/A | 1/1 | A1 |