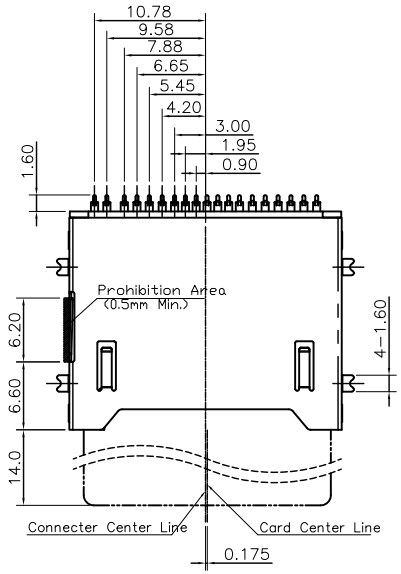

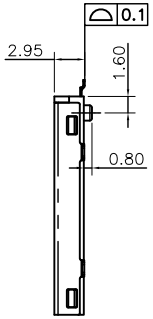

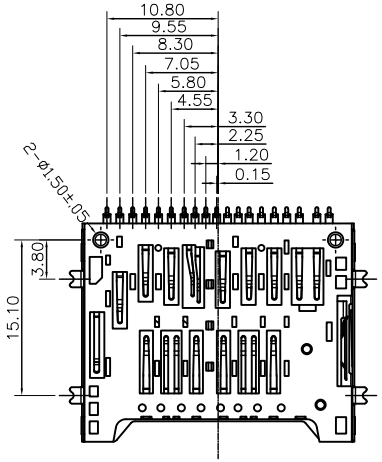

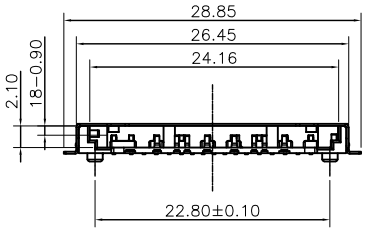

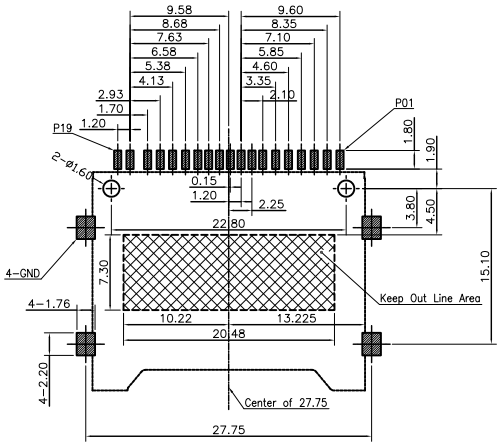

Recommended PCB Layout
Tolerance ±0.05

Card Uninsertion	P08 Open P07 / P08 Open P19
Card Write Protect insertion	P08 Short P07 / P08 Open P19
Card Normal insertion	P08 Short P07 / P08 Short P19

Pin Assignment

Pin#	Name	Description	Pin#	Name	Description
P01	VSS3	Supply Voltage Ground	P11	VDD1	Supply Voltage (3.3V)
P02	DAT2	Data Line [Bit 2]	P12	D1-	Deferential Data 1-
P03	D0+	Deferential Data 0+	P13	CLK	Clock
P04	CD/DAT3	Card Detect/Data Line [Bit 3]	P14	D1+	Deferential Data 1+
P05	D0-	Deferential Data 0-	P15	VSS2	Supply Voltage Ground
P06	CMD	Command/Response	P16	VSS5	Supply Voltage Ground
P07	CD	Card Detect	P17	DAT0	Data Line [Bit 0]
P08	VSS1	Supply Voltage Ground	P18	DAT1	Data Line [Bit 1]
P09	VSS4	Supply Voltage Ground	P19	WP	Write Protect
P10	VDD2	Supply Voltage (1.8V)			

Note:
1. Material:
   1-1. Plastic: LCP, S475, Black,HF, UL94V-0
   1-2. Contact: C5210
   1-3. Shell: SUS304
2. Plating:
   2-1. Contact:
   Contact Area: Au 1μ" min. Plating. Over Ni 50μ" min.
   Soldertail: Matte Tin 100μ" min. Plating. Over Ni 50μ" min.
   2-2. Shell:
   Ni 50μ" min. Over All, Solder Foot 1μ" Gold Over Ni
3. Contact And Tail Coplanarity To Be 0.10mm max.
4. Electrical Characteristics:
   4-1. Contact Current Rating:0.5Amperes.
   4-2. Dielectric Withstanding Voltage:AC500V r.m.s.
   4-3. Insulation Resistance:1000 Megohms
   4-4. Contact Resistance:100 mΩ Maximum.
5. Mechanical Characteristics:
   5-1. Mating Cyeles:10,000 Cycles.
6. Environmental:
   6-1. Operating Temperature:-25° C~+85° C.
   6-2. Salty spray: 48H

深圳市华宇创精密电子有限公司

TOLERANCE: X.X ±0.30 X.XX ±0.25 X.XXX ±0.15 X.° ±2° X.X° ±0.5°	DRAWED BY : 陈一鸣	DATE : 2014-02-23	PART NAME: SD4.0 NO PUSH 板上型 2.95H
	CHECKED BY: 马跃	DATE : 2014-02-23	PART NO. HYCW68-SD19-295B
			MOLD NO.
UNIT: mm [inch]	APPROVED BY: 邱敏	DATE : 2014-02-23	DRAW NO: HYC-2204011104
SCALE:1:1 SIZE: A4			SHEET NO. 1 OF 1