SAMZO | REAC/ROHS

REV	ECN NO	DESRIPTION	DESIGN	APPROVAL	DATE
A1	NEW	Replace frame			2013.06.21

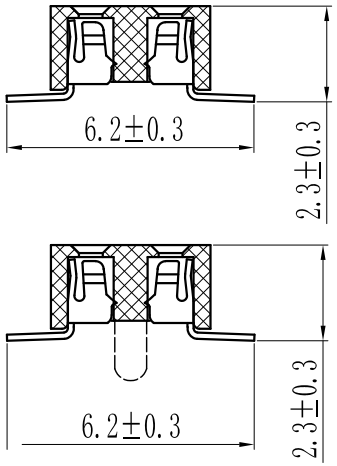

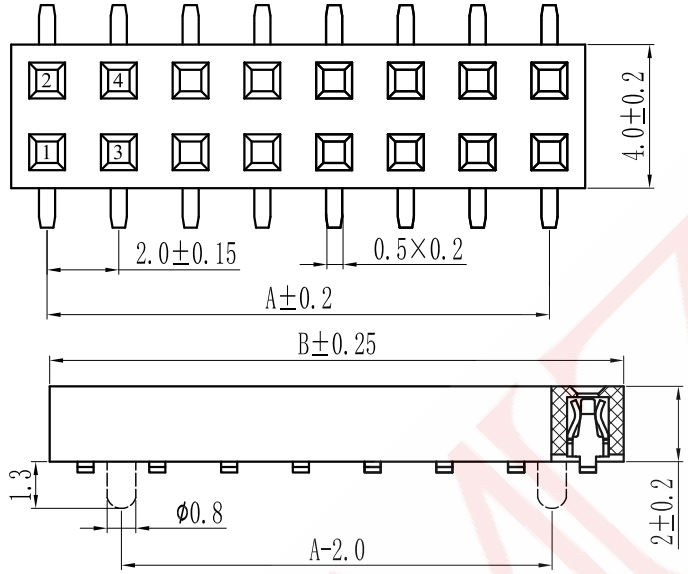

Specification:
Current Rating : 2AMP
Temperature Range : -40℃to+105℃
Contact Resistance : 20mΩ Max
Insulation Resistance : 1000MΩ Min
Withstanding Voltage : AC 500V
Material:
Insulator : Polyester (UL94V-0)
Standard:PA6T/LCP
Contact: Bronze
Plating : Au or Sn Over 50u″ Ni

Pin数	尺寸A	尺寸B
2×3	4.0	6.0
2×4	6.0	8.0
2×5	8.0	10.0
2×6	10.0	12.0
2×7	12.0	14.0
2×8	14.0	16.0
2×9	16.0	18.0
2×10	18.0	20.0
2×11	20.0	22.0
2×12	22.0	24.0
2×13	24.0	26.0
2×14	26.0	28.0
2×15	28.0	30.0
2×16	30.0	32.0
2×17	32.0	34.0
2×18	34.0	36.0
2×19	36.0	38.0
2×20	38.0	40.0
2×21	40.0	42.0
2×22	42.0	44.0
2×23	44.0	46.0
2×24	46.0	48.0
2×25	48.0	50.0
2×26	50.0	52.0
2×27	52.0	54.0
2×28	54.0	56.0
2×29	56.0	58.0
2×30	58.0	60.0
2×31	60.0	62.0
2×32	62.0	64.0
2×33	64.0	66.0
2×34	66.0	68.0
2×35	68.0	70.0
2×36	70.0	72.0
2×37	72.0	74.0
2×38	74.0	76.0
2×39	76.0	78.0
2×40	78.0	80.0

A.名称：5B-排母
B.间距：K-2.00mm
C.方式：E-180° SMT
D.塑高(H)：3-2.0mm
E:总高(H1)：23-2.3mm
F:板针宽(PC)：62-6.2mm
G:针数：202-2*2P(2-40PIN)
H:定位：W-无定位.D-带定位
I:物料编码：0-常规

$\frac{5B}{A}\ \frac{K}{B}\ \frac{E}{C}\ \frac{3}{D}$ - $\frac{23}{E}\ \frac{62}{F}$ - $\frac{2**}{G}$ - $\frac{*}{H}\ \frac{0}{I}$

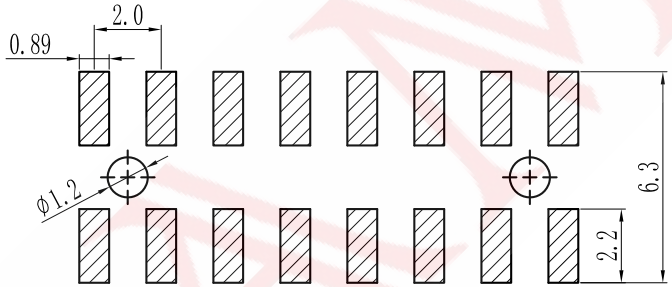

PCB LAYOUT

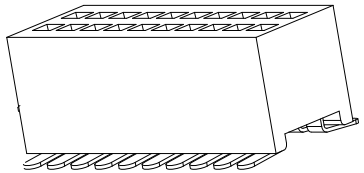

ITEM	DESCRIPTION	MATERIAL	QTY	FINSH/COLOR
1	针	黄铜	N	镀金
2	主体	PA6T	1	黑色

DESIGN	WANGGUIFA	2018.06.12
CHECKED	ZHENGUILAN	2018.06.12
APPROVED	LILIANJIANG	2018.06.14

GENERAL TOLERANCE

≥0~2<	±0.15
≥2~5<	±0.25
≥0~2<	±0.15
≥5	±0.35

FIRST VIEW

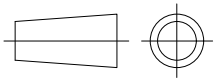

SCALE	1:1	UNIT	mm

The copyright belongs to samzo parts [China] Co., Ltd. please use the material after samzo parts agree to authorize. The final right of interpretation belongs to samzo parts.
WWW.KKK-JP.COM

SAMZO COMPONENTS
Electronic switch and connector manufacturer

TITLE:：
2.0PF 2*NP H2.0 PC6.2 180°SMT
DWG NO：5BKE3-P661400
PART NO：5BKE31901223
MODEL NO：5BKE3-2362-2NP-*-0
NAME：
PIN-F CONNECTOR