REVISION RECORD				
REV	ECO	DESCRIPTION	DRFT	CHKD

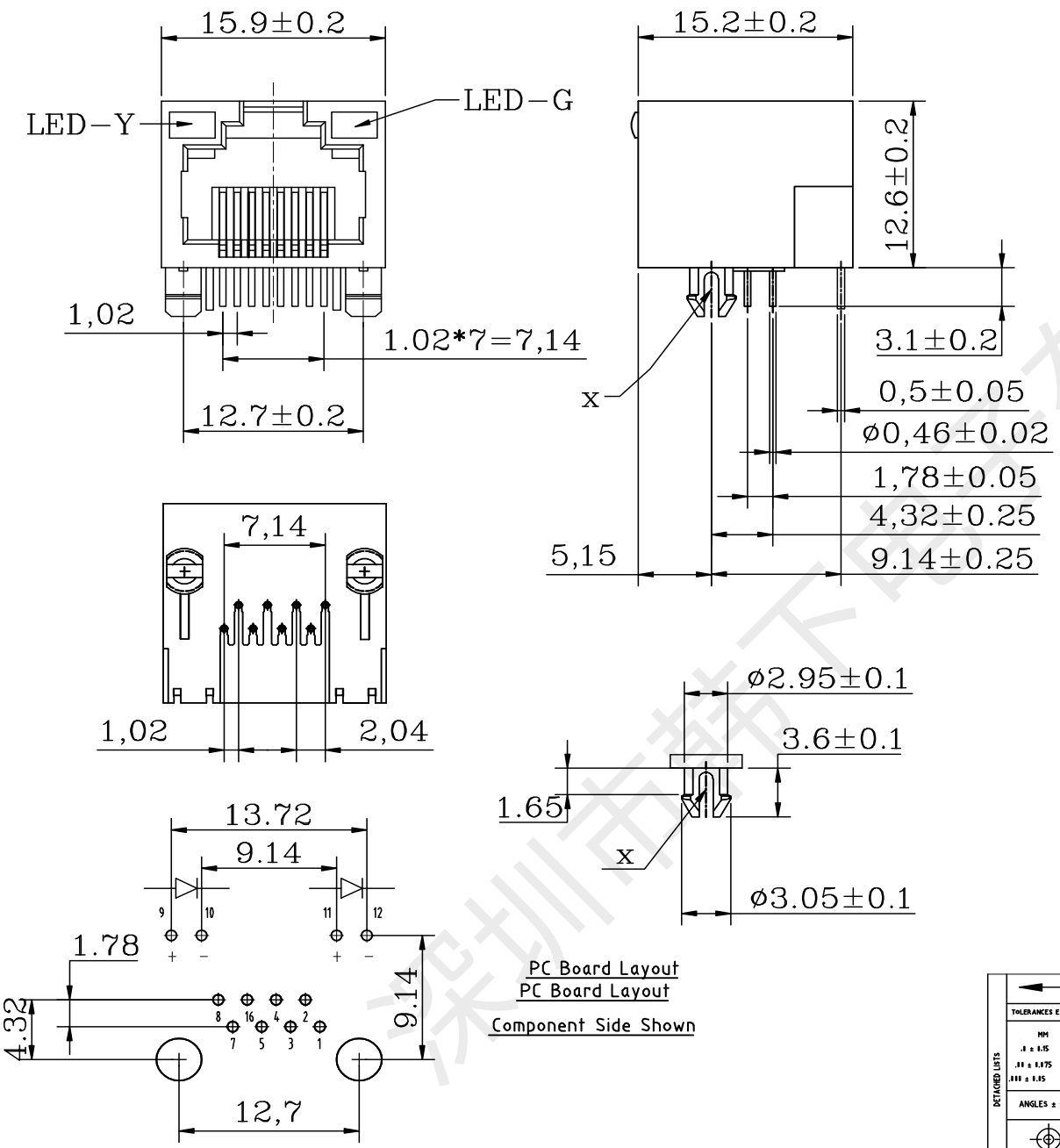

PC Board Layout
PC Board Layout
Component Side Shown

Specifications:

1. Electrical:
   Rated voltage and current: 125V 1.5A Max
   Contact resistance: 50mΩ Max Initial state
   100mΩ Max End state
   Insulation resistance: 500MΩ Min
   Withstand Voltage: AC 1000V
2. Mechanical:
   Durability: 750 Cycles 20-30Cycles/Min
3. Matorial:
   Housing: Glass Filled Polyester UL94V-0
   Contact: Phosphor Bronze
   Plating: Gold Plating Fu“50u”Over Nickel
4. Temperature Range: -25℃ to +85℃.
5. Welding temperature: 260±5℃ 3±0.5S

MM (INCH)	DFTO 黄彬	DATE	深圳市韩下电子有限公司 HANXIA
TOLERANCES EXCEPT AS NOTED	CHKD 张伟	DATE	TITLE
MM .0 ± 0.15 .00 ± 0.075 .000 ± 0.15	MFO	DATE	HX-RJ45 90 5631-1x1S LED
	APPVL 罗小春	DATE	
DETACHED LISTS	MATERIAL :		
ANGLES ± 0.5	Q.T'Y :		DRAWING NO. / PART NO. — SIZE A3 — REV 0
THIRD ANGLE PROJECTION	FINISH :		
	SCALE :		DO NOT SCALE DRAWING — SHEET X OF Y

深圳市韩下电子有限公司