REVISION RECORD				
REV	ECO	DESCRIPTION	DRFT	CHKD

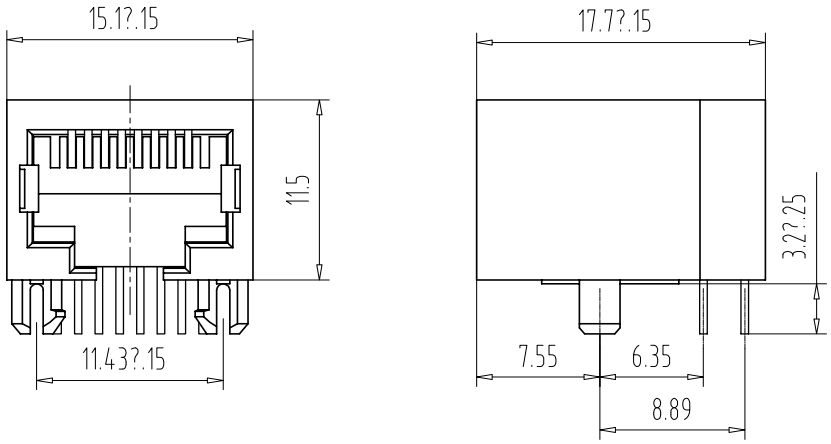

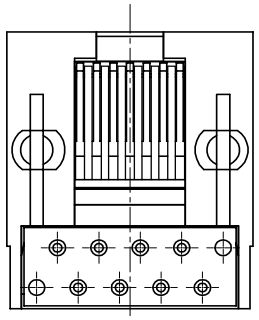

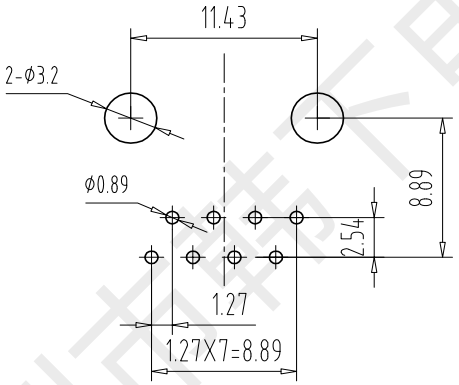

PC Board Layout

Component Side Shown

Specifications:

1. Electrical:
   Rated voltage and current: 125V 1.5A Max
   Contact resistance: 50mΩ Max Initial state
   100mΩ Max End state
   Insulation resistance: 500MΩ Min
   Withstand Voltage: AC 1000V
2. Mechanical:
   Durability: 750 Cycles 20-30Cycles/Min
3. Matorial:
   Housing: Glass Filled Polyester UL94V-0
   Contact: Phosphor Bronze
   Plating: Gold Plating Fu“50u”Over Nickel
4. Temperature Range: -25℃ to +85℃.
5. Welding temperature: 260±5℃ 3±0.5S

深圳市韩下电子有限公司

MM (INCH)	DFTO: 黄彬 DATE: 2020.8.25	韩下 HANXIA 深圳市韩下电子有限公司	
TOLERANCES EXCEPT AS NOTED	CHKD: 张伟 DATE: 2020.8.25		
MM .0 ± 0.15 ± .00 ± 0.075 ± .000 ± 0.05 ±	MFO: DATE:	TITLE HX-RJ45 90 5622-1x1 10P8C S-B	
	APPVL: 罗小春 DATE: 2020.8.25		
ANGLES ± 0.5	MATERIAL :		
	QT'Y :	DRAWING NO. E56B1001	SIZE A3 / REV 0
THIRD ANGLE PROJECTION	FINISH :	PART NO.	
DETACHED LISTS	SCALE :	DO NOT SCALE DRAWING	SHEET X OF Y