RoHS

序号	品名	材质
①	XH2.5直针WTB胶芯	PA66 UL94V-0 米色 白色
②	XH2.5弯针WTB端子	铜合金/表面镀锡

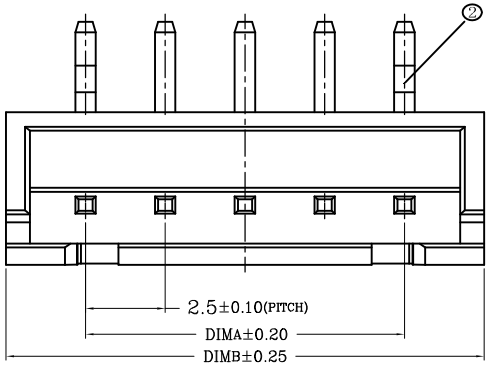

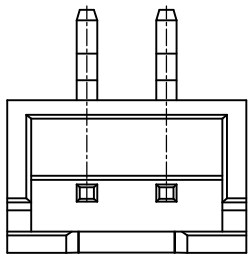

2 Pin样式

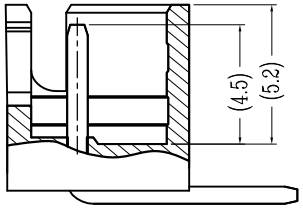

SECTION A-A

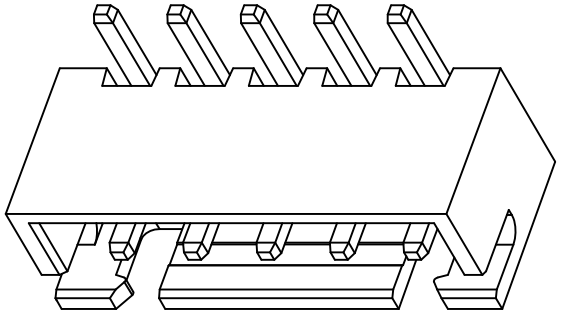

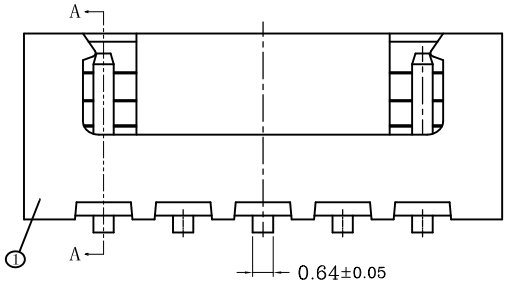

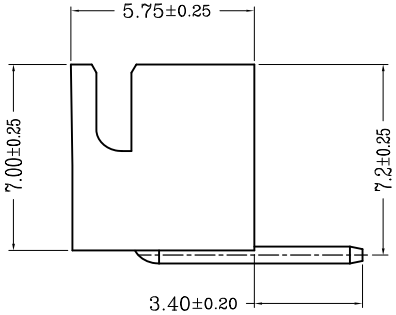

TYPE 1(无K脚)

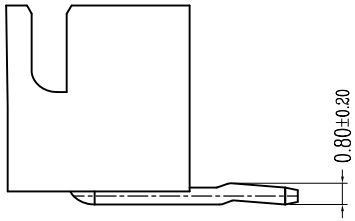

TYPE 2(打K脚)

技术指标(Technical Index):

1. 温度范围(Temperature range): -25° C～+85° C.
2. 额定电压(Rated voltage): 250V, AC.
3. 额定电流(Rated current): 3.0A AC,DC.
4. 接触电阻(Contact resistance): ≤20mΩ .
5. 耐压值(Withstanding voltage): 1000V AC/minute.
6. 绝缘电阻(Insulation resistance):≥1000MΩ.
7. 产品料号(Product material No.):

CKT	A	B	CKT	A	B
2	2.5	7.5	10	22.5	27.5
3	5.0	10.0	11	25.0	30.0
4	7.5	12.5	12	27.5	32.5
5	10.0	15.0	13	30.0	35.0
6	12.5	17.5	14	32.5	37.5
7	15.0	20.0	15	35.0	40.0
8	17.5	22.5	16	37.5	42.5
9	20.0	25.0			

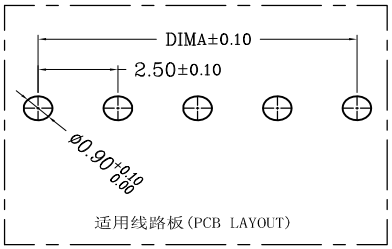

适用线路板(PCB LAYOUT)

REV	DATE	MODIFICATION DESCRIPTION	CHANGE

OPERATION						
X.X	±0.30	DRAW			SCALE	FIT
X.XX	±0.20	CHECK			UNIT	mm
X.XXX	±0.10				SIZE	A4
Angle	±3°	APPROVE			SHEET	1/1
DIM	TOL				PROJ.	

深圳市连盛精密连接器有限公司

PART NO.	1130400148
TITLE:	XH-NAW