REV.	ECN NO.	DESCRIPTION	DATE	DESIGN

Pb Process Capable

RoHS Compliant 2011/65/EU

Compliant Halogen Free

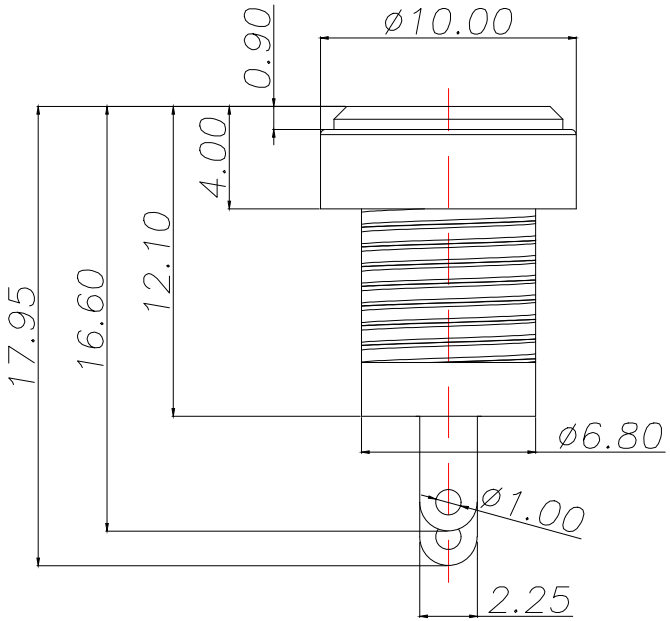

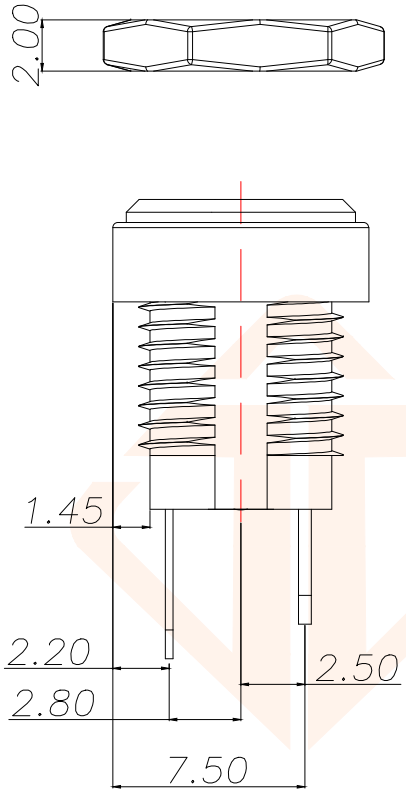

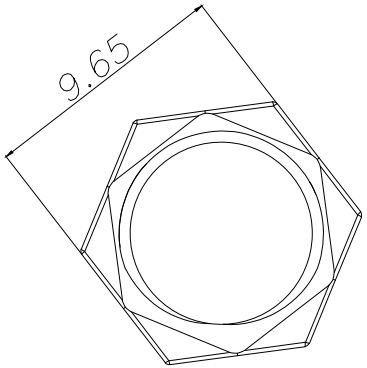

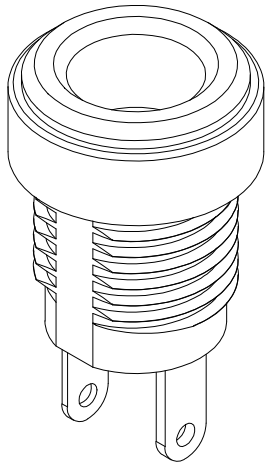

PIN	P/N
ø1.3	DC022B-13
ø2.0	DC022B-20
ø2.5	DC022B-25

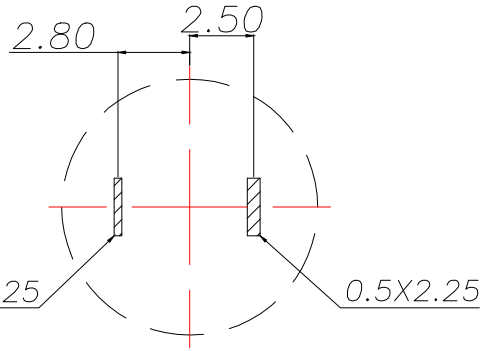

PCB.WELDING DRAWING

Main technical performance	
Rated electrical load	DC 24V 6A
Contact resistance	≤0.03Ω
Insulation resistance	≥100MΩ
Pressure resistance	AC 500V 1min
Insertion force	3-30N
Operating temperature range	-20C°~+70C°
service life	5000cycles

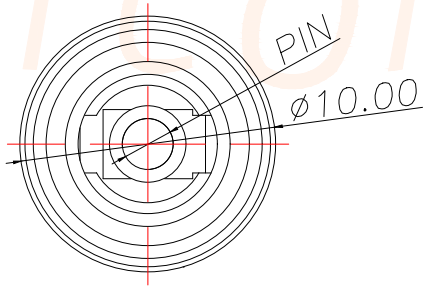

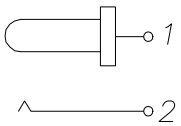

SCHEMATIC

TOLERANCE		深圳聚兴泰电子科技有限公司 Shenzhen Juxingtai Electronic Technology Co., Ltd		
X.:±0.30	X.°:±5°	PART NO. DC022B-N	TITLE: DC SOCKET	
X.X:±0.25	X.X°:±1°			
X.XX:±0.15				
UNITS	mm	DESIGN: Ethan	MANUFACTURE DWG	
MATERILA	— — —	CHED: Olvia	SCALE	SHEET
FINISH	— — —	APPD: Ava	N:A	1/1

JXTCONN