GENERAL TOLERANCE											
	10 MAX	50 MAX	100 MAX	250 MAX	250 OVR	R5 MAX	R10 MAX	R20 MAX	R20 OVR	ANGLE	ECCENT
A	±0.15	±0.2	±0.3	±0.5	±0.75	±0.2	±0.3	±0.5	±2.5	±3°	0.1
B	±0.2	±0.3	±0.55	±0.95	±1.4					±3°	0.1
Ⓒ	±0.3	±0.5	±0.8	±1.4	±2					±3°	0.15

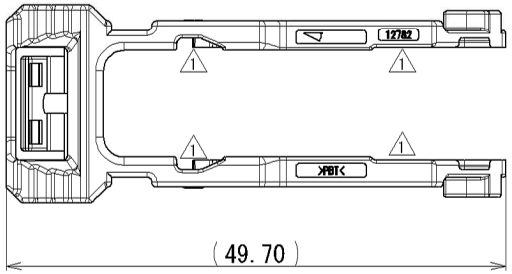

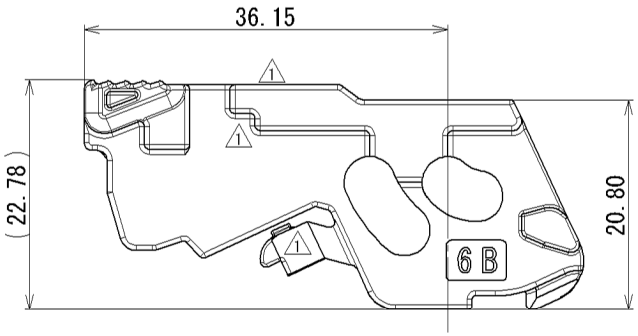

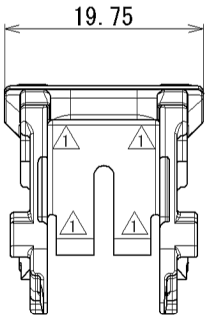

注記

1. かん合相手品番: 7286-1896、7386-1860
2. △1 取扱説明書NO.: YPES-15-983

NOTE

1. MATING PART NO.: 7286-1896、7386-1860
2. △1 HANDLING MANUAL NO.: YPES-15-983

ISSUE MARK

LET	DATE	REVISION RECORD	NO.	CHKD
△1	2010/10/28	CHANGED FORM ETC.	C10-Z625	K.K
	2007/05/15	NEW	C07-Z433	A.P

GENERAL TOLERANCE							
	10MAX	50MAX	100MAX	250MAX	250OVR	ANGLE	ECCENT
A	±0.15	±0.2	±0.3	±0.5	±0.75	±30'	0.1
B	±0.2	±0.3	±0.55	±0.95	±1.4	±30'	0.1
C	±0.3	±0.5	±0.8	±1.4	±2	±30'	0.15

SPECIFIED

MASS g

CUSTOMER

CUSTOMER PART NO. | CUSTOMER DWG NO.

OFFICE | TRIAL PART NO.

VENDOR

VENDOR NO.

DWG TYPE	DWG SOURCE	DWG DATE	UNIT	SCL	ANGLE
R	NEW	2007/05/15	mm	2:1	3

APPROVED	CHECKED	CHECKED	DESIGN	DRAWN
M.FUKUDA	O.SUGIYAMA	K.KIDA	A.TSURUTA	J.CANDO
2010/10/28	2010/10/28	2010/10/28	2006/06/16	2010/10/28

MATL. SPEC. PBT(BLACK)

TREAT. & FIN.

NAME 6 BLOCK LEVER

PART NO. / CH. CODE 7173-0417-30

DWG NO. 7173-0417-30:R

SET DWG NO.

YAZAKI CORPORATION