RoHS

编号	名称	材质
①	胶芯	LCP UL94V-0 Natural/Black
②	端子	Brass/Tin plating
③	焊片	Brass/Tin plating

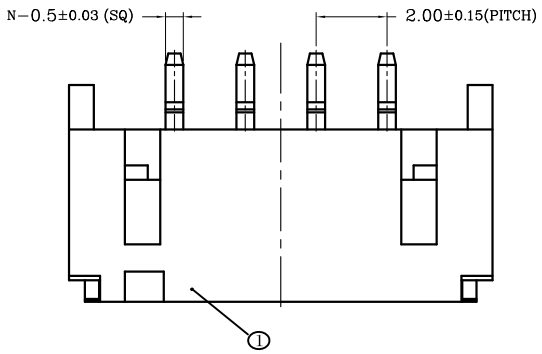

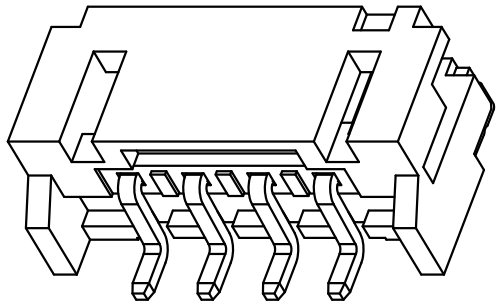

技术指标:

1. 工作温度: -25° C～ 105° C.
2. 额定电压: 200V DC/AC(rms).
3. 额定电流: 2.0A.
4. 接触电阻: ≤20mΩ.
5. 耐压值: 500V AC/minute.
6. 绝缘电阻:≥1000MΩ.
7. 产品料号:

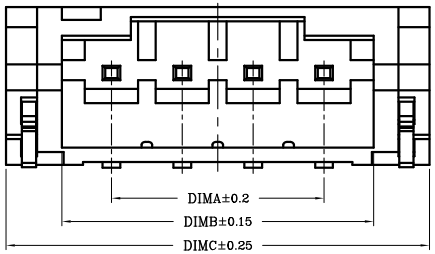

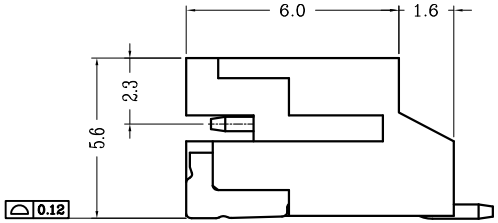

CKT	DIM A	DIM B	DIM C
2	2.00	4.80	7.95
3	4.00	6.80	9.95
4	6.00	8.80	11.95
5	8.00	10.80	13.95
6	10.00	12.80	15.95
7	12.00	14.80	17.95
8	14.00	16.80	19.95
9	16.00	18.80	21.95
10	18.00	20.80	23.95
11	20.00	22.80	25.95
12	22.00	24.80	27.95
13	24.00	26.80	29.95
14	26.00	28.80	31.95
15	28.00	30.80	33.95
16	30.00	32.80	35.95
17	32.00	34.80	37.95
18	34.00	36.80	39.95
19	36.00	38.80	41.95
20	38.00	40.80	43.95

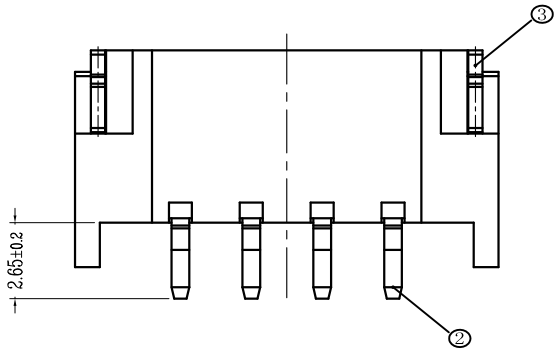

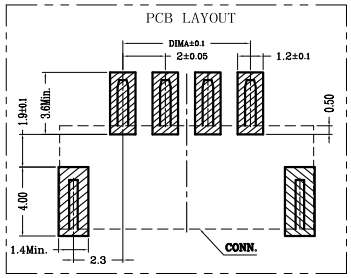

REV	DATE	MODIFICATION DESCRIPTION	CHANGE

OPERATION						
X.X	±0.30	DRAW			SCALE	FIT
X.XX	±0.20	CHECK			UNIT	mm
X.XXX	±0.10				SIZE	A4
Angle	±3°	APPROVE			SHEET	1/1
DIM	TOL				PROJ.	

深圳市连盛精密连接器有限公司

PART NO.	1130300199
TITLE:	PH-NAWR