RoHS

序号	品名	材质
①	2.00 F型立式WTB胶芯 2.00Pitch S/T Wire To Board Housing(H=6.8)	LCP UL94V-0 本色 **Natural**
②	2.00 F型立式WTB端子 2.00 Pitch S/T Wire To Board Terminal(H=6.8)	铜合金/表面镀锡 Copper Alloy/ Tin Plating
③	2.00 F型立式WTB焊片 2.00 Pitch S/T Wire To Board Fitting Nail(H=6.8)	铜合金/表面镀锡 Copper Alloy/ Tin Plating
④	2.00 F型立式WTB吸盖 2.00 Pitch S/T Wire To Board Cover(H=6.8)	LCP UL94V-0 本色 **Natural**

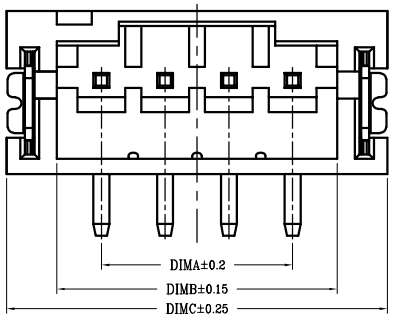

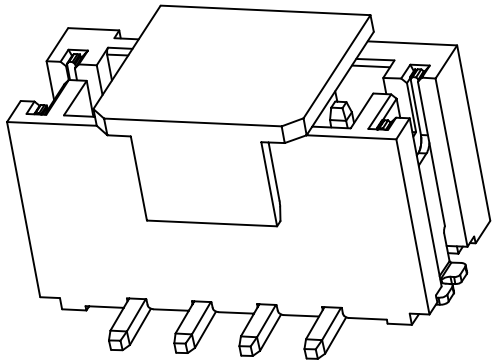

技术指标(Technical Index):

1. 塑件表面应光洁、无毛边、无明显收缩、缺陷、裂纹等现象.
(The surface of the plastic parts should be smooth, no rough edges, no obvious shrinkage, defects, cracks and other phenomena)
2. 不同pin位吸盖加入/取出力有差异，实属正常现象.
（It is normal than there are difference between suction cap and suction cap at different Pin postitions)
3. 温度范围(Temperature range)：-40° C～85° C.
4. 额定电压(Rated voltage)：200V，AC.
5. 接触电阻(Contact resistance)：
≤55mΩ（initial）per contact,≤25mΩ Change allowed.
6. 绝缘电阻(Insulation resistance):≥1000MΩ.
7. 产品料号(Product material No.)：

WT200FL—** * *—**

- NO OF CKT(产品PIN数)
- Plating(电镀方式)
  - 0:端子全雾锡 (Terminal all mist tin)
  - 1:端子全金 (Terminal G/F OVER ALL)
  - 4:端子全亮锡 (Terminal all bright tin)
- Packing(包装方式)
  - T:TUBE管装
  - R:TAPE & REEL卷装
  - C:TAPE & REEL WITH COVER加吸盖卷装
- 00 胶芯有LOGO:WD(Housing with LOGO:WD)
- OW 胶芯无LOGO(Housing without LOGO)

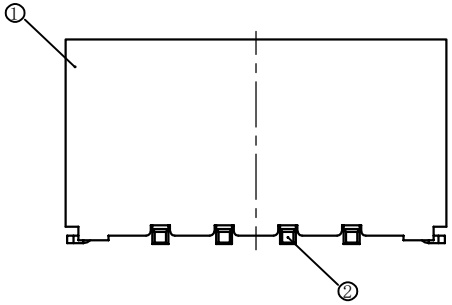

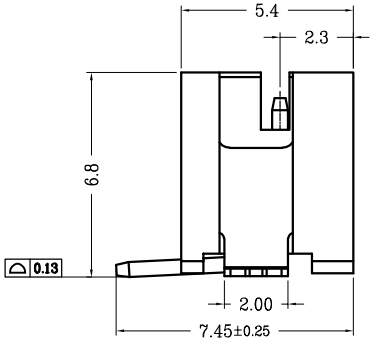

CKT	DIM A	DIM B	DIM C
2	2.00	4.80	7.95
3	4.00	6.80	9.95
4	6.00	8.80	11.95
5	8.00	10.80	13.95
6	10.00	12.80	15.95
7	12.00	14.80	17.95
8	14.00	16.80	19.95
9	16.00	18.80	21.95
10	18.00	20.80	23.95
11	20.00	22.80	25.95
12	22.00	24.80	27.95
13	24.00	26.80	29.95
14	26.00	28.80	31.95
15	28.00	30.80	33.95
16	30.00	32.80	35.95
17	32.00	34.80	37.95
18	34.00	36.80	39.95
19	36.00	38.80	41.95
20	38.00	40.80	43.95

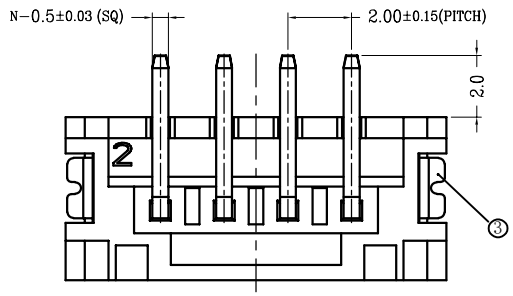

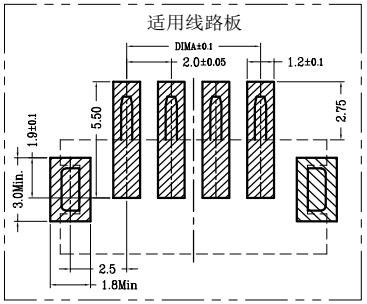

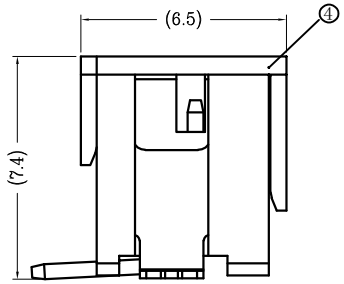

WITH COVER

REV	DATE	MODIFICATION DESCRIPTION	CHANGE

OPERATION	
X.X	±0.30
X.XX	±0.20
X.XXX	±0.10
Angle	±3°
DIM	TOL

DRAW			
CHECK			
APPROVE			

SCALE	FIT
UNIT	mm
SIZE	A4
SHEET	1/1
PROJ.	

深圳市连盛精密连接器有限公司

PART NO.	1130300187
TITLE:	PH-NAWV