REV.	ECN NO.	DESCRIPTION	DATE	DESIGN

Pb Process Capable

RoHS Compliant 2011/65/EU

Compliant Halogen Free

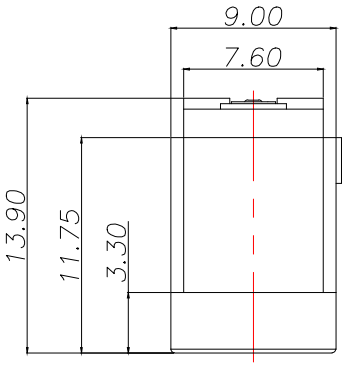

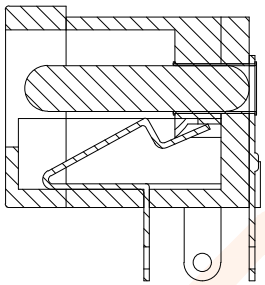

A–A

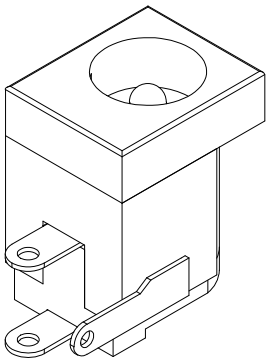

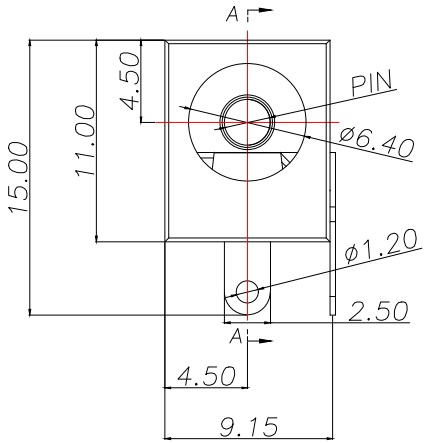

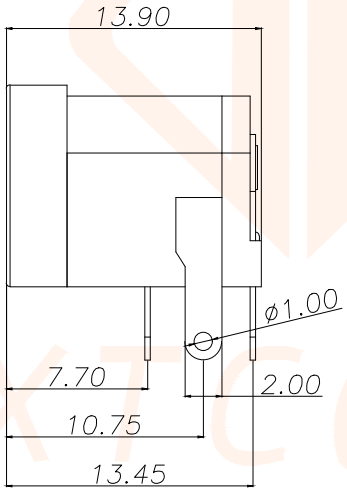

PIN	P/N
ø2.0	DC–005–20
ø2.5	DC–005–25

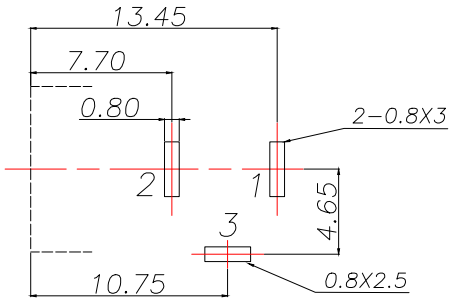

PCB.WELDING DRAWING (TOLERANCE:±0.05)

Main technical performance	
Rated electrical load	DC 24V 5A
Contact resistance	≤30mΩ
Insulation resistance	≥100MΩ
Pressure resistance	AC 500V 1min
Insertion force	3–30N
Operating temperature range	–20C°~+70C°
service life	5000cycles

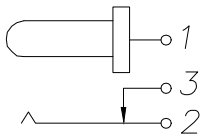

SCHEMATIC

6	弯片	1	H62 黄铜带	D.Cu/Sn
5	插针	1	H65 黄铜带	D.Cu/Sn
4	后盖	1	PA66 工程塑料	黑
3	平片	1	H62 黄铜带	D.Cu/Sn
2	簧片	1	锡青铜带	
1	基座	1	PA66 工程塑料	黑
序号	名称	数量	材料	备注

TOLERANCE		深圳聚兴泰电子科技有限公司 Shenzhen Juxingtai Electronic Technology Co., Ltd		
X.:±0.30	X.°:±5°	PART NO. DC–005–N	TITLE: DC SOCKET	
X.X:±0.25	X.X°:±1°			
X.XX:±0.15				
UNITS	mm	DESIGN: Ethan	MANUFACTURE DWG	
MATERILA	— — —	CHED: Olvia	SCALE	SHEET
FINISH	— — —	APPD: Ava	N:A	1/1

JXTCONN