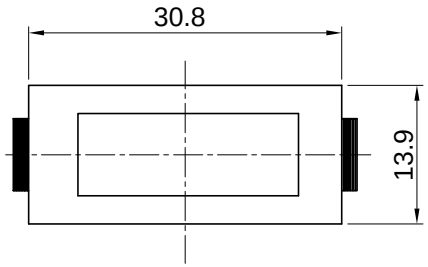


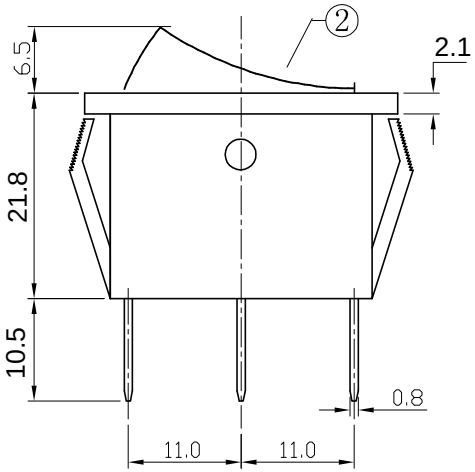


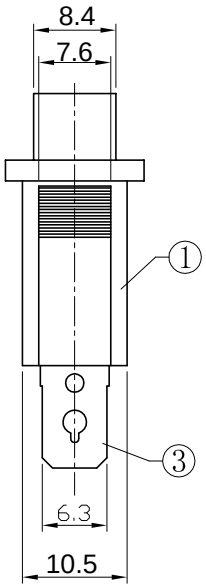


P.C.B LAYOUT

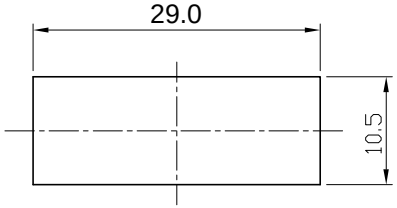


1.使用温度范围:T85
2.绝缘电阻: ≥100MΩ
3.接触电阻: ≤100MΩ
4.耐压: AC150V(50Hz)/min
5.抗电强度: ≥1500V AC/min
6.机械寿命: 10000次

| NO. | DESCRIPTION | QTY | MATERIAL | PLATING |
|---|---|---|---|---|
| 3 | CONTACT FOOT | 3 | BRASS | |
| 2 | BUTTON | 1 | POM | |
| 1 | HOUSING | 1 | POM | |

| | | | | | |
|---|---|---|---|---|---|
| UNIT:MM | TYPE: ROCKER SWITCH | KCD3-3P-R | PAPER NO: A4 | | PAGE 1 OF 1 |
| | | | TOLERANCE | ANGLES | SCALE | VER |
| | | | ±0.20 | ±1.5° | 2:1 | 1 |
| DESIGNER BY: | | 深圳市逸致电子有限公司 Shenzhen Yizhi Electronics Co.,LTD | | | |
| CHECK BY: | | | | | |
| APPROVED BY: | | | | | |