SOREDE
索 瑞 達 電 子

深圳市索瑞达电子有限公司

承 认 书

SPECIFICATION FOR APPROVAL

客 户 名 称：
Customer Name : 标准

客 户 料 号：
Customer P/N:

产 品 名 称：
Product Name: 共模电感

索 瑞 达 料 号：
Sorede P/N: SBCM.5555.YF系列

制造厂商 Manufacturer	
拟 制 Draft	莫程惠
审 核 Check	符妃团
日 期 Date	2025-10-23

深圳市索瑞达电子有限公司 工程专用章

客户承认印章 Approval Signet	
日期 Date	

地址:深圳市观澜镇福城街道新塘村8号源创园陆号A6栋3楼.

Address:3Rd Floor, Building A6, Yuanchuangyuanlu, No. 8 Xintang Village, Fucheng Street, Guanlan Town, Shenzhen.

电话 Tel: 0755-29803356 传真 Fax: 0755-29803506

电子邮件 E-mail: sorde@vip.163.com

网址 http// www.szsorede.com

修 改 履 历 表

Modify Resume

修改日期 Date modified	修 改 明 细 Modify Details	修改后版本号 Version No.
2025-10-23	文件新制订　File formulation	A

1、外形尺寸 Dimension ：

单位Unit：mm

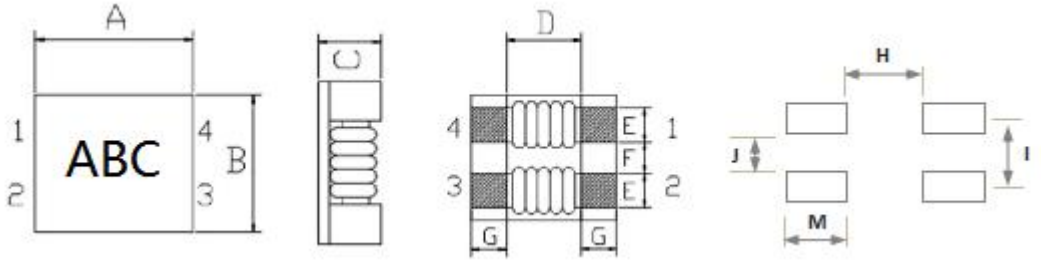

A	5.6±0.5
B	5.5±0.5
C	3.5Max
D	3.3Ref
E	1.2±0.5
F	1.9±0.5
G	1.1±0.5
H	3.1Ref
I	3.1Ref
J	1.4Ref
K	1.8Ref
M	1.4Ref

2、产品品名构成 Product Spec. Model

SBCM . 5555 . Y F 501 T T 00

a b c d e f g h

a：系列名称Series name

b：产品尺寸Product dimensions

c：密封方式Sealing way (L：冷封Cold seal Y：热封Heat seal)

d：印字方向 Lettering direction ▶

e: 阻抗值Impedance Value

(900:90Ω; 151: 150Ω; 102:1000Ω)

f: 阻抗公差 Impedance Tolerance(±25%)

g: 包装Package(T:磁带/卷轴Tape/Reel、B: 散装Bulk)

h：编号Numbering（标准standard）

▶ **Lettering direction**

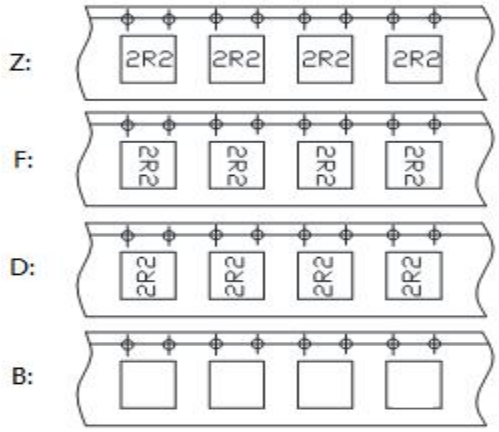

3、材料清单MATERIAL LIST

NO.	PARTS	MATERIAL SPECIFICATIONS	UL FILE NO.	TEMP. CLASS
1	CORE	FERRITE	FENGYIN OR EQ	NA
2	WIRE	P180 Grd1	ELEKTRISOL A OR EQ	180℃
3	CASE	LCP	LIAN CHENG OR EQ	NA
4	ADHESIVE	EPOXY RESIN	NAGASE OR EQ	NA
5	SOLDER	Sn99.3:Cu0.7	SHENMAO OR EQ	NA

*NA:NOT APPLICABLE.

4、电性能参数表 Electrical Characteristics List

Part Number	Impedance (Ω@100MHz)		DCR (mΩ) max.	Rated Current (A)Max	Rated Volt. (Vdc)max	IR (MΩ) min.	MARK
	Min	Typ					
SBCM.5555.YF501TT00	275	500	10.0	4.5	80	10	501
SBCM.5555.YF701TT00	500	700	13.0	3.8	80	10	701
SBCM.5555.YF102TT00	750	1000	20.0	3.0	80	10	102

Note:

※工作温度 Operating temperature rang：-40 ℃ to +125℃（Including Self-heating）

※储存温度 Storage termperature rang：-40 ℃ to +125℃

※Impedance measure condition at 100MHz,0.5V. 共模阻抗测试条件为 100MHz,0.5V。

※Rated current：the value of DC current when the temperature rise is ΔT40℃(Ta=25℃).

额定电流：使产品温度上升到 ΔT40℃时所加载的直流电流值(Ta=25℃)。

4-1、参数表 Characteristics List

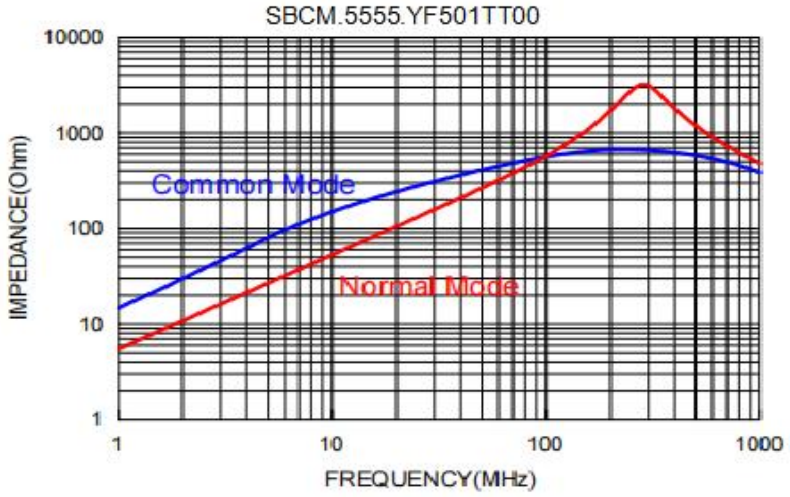

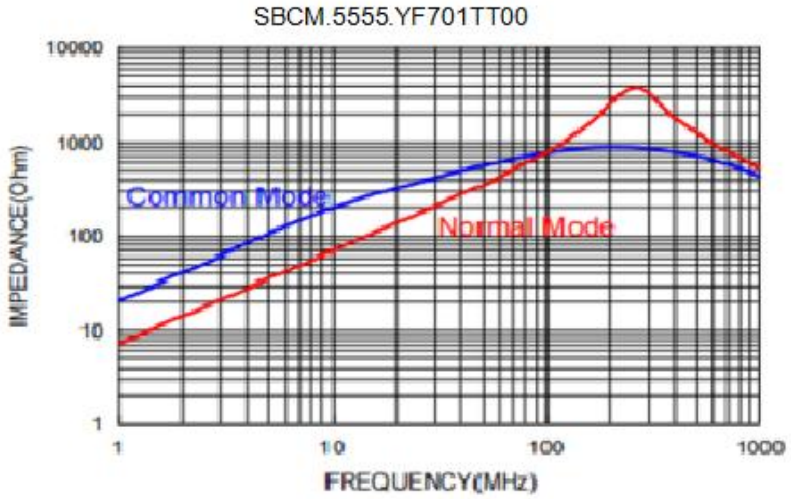

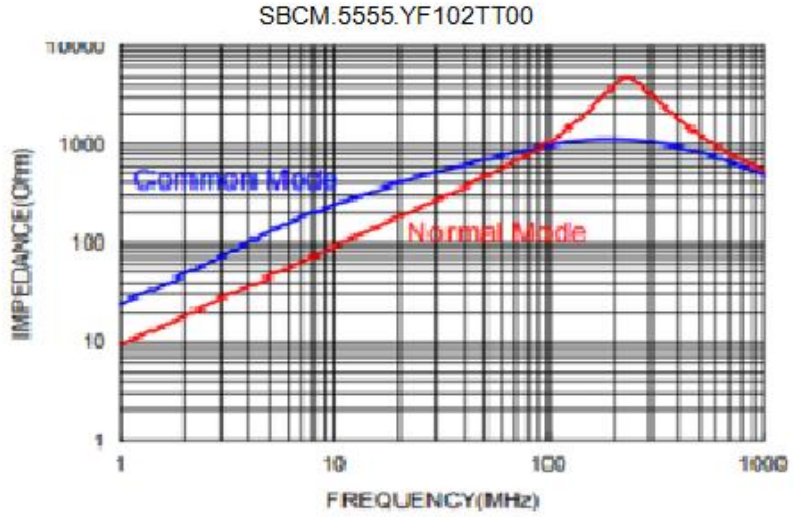

5、产品包装 Packaging

1）载带包装示意图 Tape packing diagram

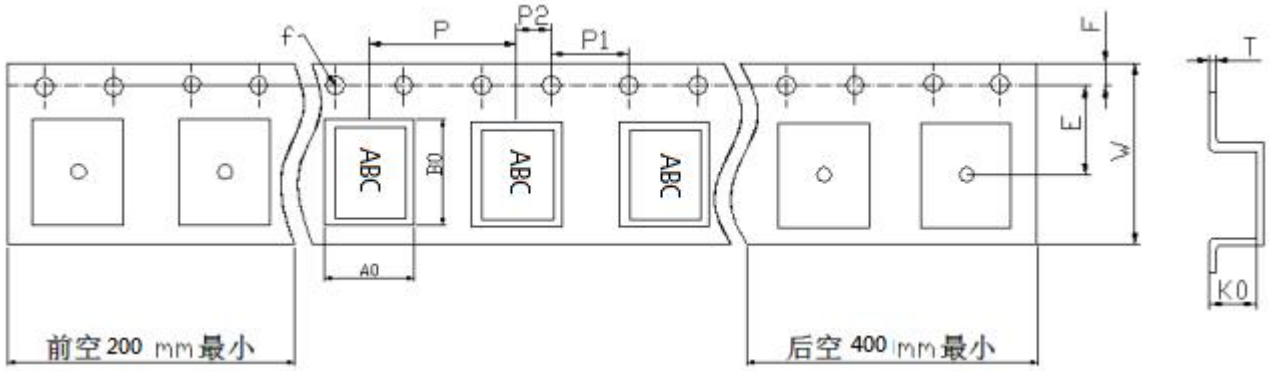

Series	W	P	P1	P2	E
	12.0±0.1	8±0.1	4.0±0.1	2.0±0.1	7.5±0.1
SBCM.7060	F	A0	B0	K0	T
	1.75±0.1	6.1±0.1	6.2±0.1	3.7±0.1	0.40±0.1

2）卷盘包装示意图 Tape packing diagram

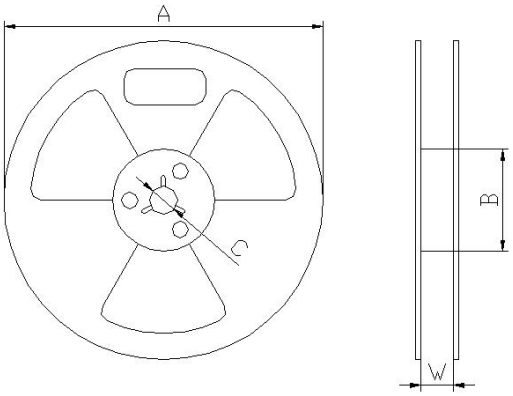

A	330±0.5
B	100±0.5
C	13.5±0.5
W	12.5±0.5

3）卷盘包装示意图 Tape packing diagram

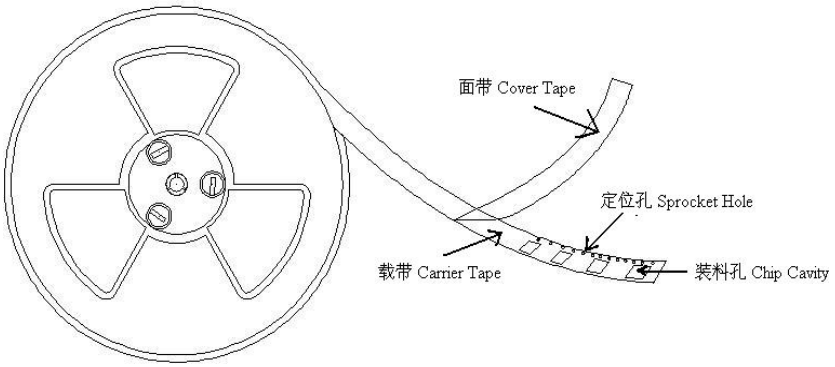

4）剥离强度要求Peeling required

①F 力大小：20～100g；

②面带剥离角度：165°～180°。

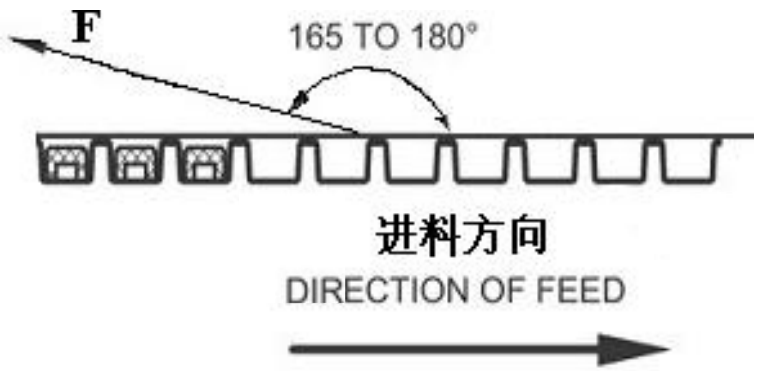

5）包装数量 Packing quantity

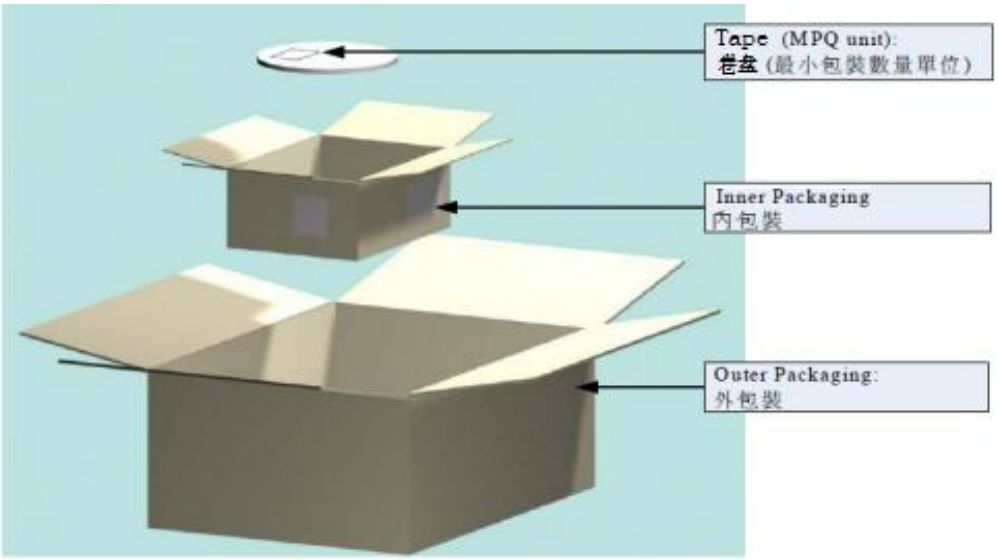

项目 (Project)	数量（PCS）	尺寸规格（Size:mm）
盘(Reel)	1500	13″
内盒 (Inner box)	6000	340mm*340mm*65mm
外箱 (Out box)	18000	360mm*360mm*235mm

6、信赖性试验 RELIABILITY TEST

NO	Item 项目	Specifications 规范	Test Methods 测试方法
1	Solder-Ability 可焊性	More than 90% of termination should be covered with new solder. 端电极焊锡覆盖率为 90%以上	Solder 焊锡: Sn 纯锡 Temperature 焊锡温度: 255℃+5℃/-0℃ Flux 助焊剂: rosin 松香 Duration 浸渍时间: 3.5±0.5s
2	Leaching Resistance 耐焊性	More than 75% of termination Should be covered with new solder. 端电极焊锡覆盖率为 75%以上	Solder 焊锡: Sn 纯锡 Temperature 焊锡温度:270℃+2℃/-0℃ Flux 助焊剂: rosin 松香 Duration 浸渍时间: 10±0.5s
3	Drop 跌落	①No mechanical damage shall be noticed 外观无可见机械损伤 ②Impedance shall be within ±20% of the initial value 阻抗变化率≤±20%	Drop 10 times on a concrete floor from a height of 1m. 从距混凝土地面 1m 高度自由落下，重复 10 次
4	Vibration 振动		Frequency 频率: 10 to 55Hz Amplitude 振幅: 1.52mm Direction and time 方向及时间: X, Y and Z directions for 2 hours each.
5	Humidity resistance 耐潮湿		a. Test condition 试验条件 Temp. 温度: 40±5℃ Humidity 湿度: 90%~95% Test time 试验时间: 500±12hr. b. Measurement method 测量条件: The component should be stabilized at normal condition for 24 hours before test. 试验后常温常湿环境中放置（24±2）小时后测量
6	High temperature resistance 耐高温		a. Test condition 试验条件 Applied rated current 施加额定电流 Temp. 温度: 85±5℃ Test time 试验时间: 500±12hr. b. Measurement method 测量条件: The component should be stabilized at normal condition for 24 hours before test. 试验后常温常湿环境中放置（24±2）小时后测量
7	Low temperature resistance 耐低温	①No mechanical damage shall be noticed 外观无可见机械损伤 ②Impedance shall be within ±20% of the initial value 阻抗变化率≤±20%	a. Test condition 试验条件 Temp. 温度: -40±5℃ Test time 试验时间: 500±12hr. b. Measurement method 测量条件: The component should be stabilized at normal condition for 24 hours before test. 试验后常温常湿环境中放置（24±2）小时后测量
8	Thermal shock 热冲击		a. Test condition 试验条件 1) Temp. 温度: -40℃, time 时间: 30±3min 2) Temp. 温度: +85℃, time 时间: 30±3min 100 cycles b. Measurement method 测量条件: The component should be stabilized at normal condition for 24 hours before test. 试验后常温常湿环境中放置（24±2）小时后测量

7、注意事项 Note

①本承认书保证我司产品作为一个单体时的质量情况。当我司产品被安装到贵司产品上时，请保证贵司的产品已根据贵司的规范进行了有效评估和确认。

This product specification guarantees the quality of our product as a single unit. Please make sure that your product is evaluated and confirmed against your specifications when our product is mounted to your product.

②如果贵司对我司产品的使用已超过了本承认书所界定的产品功能，那么对于由此引发的失效，我司将不予保证。

We cannot warrant against failure caused by any use of our product that deviates from the intended use as described in this product specification.

③为了保持终端电极的焊接性，并使包装材料保持良好状态，必须控制储存区的温度和湿度。

To maintain the solderabilty of terminal electrodes and to keep the packing material in good condition,temperature and humidity in the storage area shouid be controlled.

※建议的条件：-10～+40℃，30~70%RH。

Recommended conditions: -10～+40℃，30~70%RH.

※储存超过六个月的，应在实际使用前进行焊接检验。

In case of storage over 6 months,soldrability shall be checked before actual usage.

※即使在理想的储存条件下，产品的可焊性也随着时间的推移而降低。因此，产品应从交货时算起，建议8个月之内使用完。

Even under ideal storage conditions, the weldability of the product decreases over time. therefore, the product should be From the time of delivery, it is recommended that it be used within 8 months.

④本承认书在客户收到30 天之内，必须签章返回，逾期视为默认。

The Specification Approval should be sent back to the supplier with customer`schop on it within 30 days after receiving it, or we will take it as approved by customer`s automatically.

⑤如有特殊规格要求，请事前联络我司技术部人员。

In case of special specifications please contact our technical department prior staff.