深圳市佑驰电子有限公司

Specification for Approval

产品名称: 一体系列电感

规格型号: HCMC-1007A50-R22-M

产品编号:

日　　期: 2020-01-23

1、本承认书的内容更改需经过双方确认，任一方单独的修改均视为无效。

2、本承认书在送达客户后，请给予承认并即签回， 如无签 回下订单 的， 我司有权以此承认　书标准生产， 并表示购买方默认许可。

	审核	制作

批准	申核	检验

http://www.szyouchi.com　　邮箱：chengjian@yc-ele.com

REVISION					
REV	DESCRIPTION	DATE	DESIGNED	CHECKED	APPROVED
A0	文件建立	2020/01/23	吕秀秀	Bowen	Darren

High Current, Power Inductors
HCMC-1007A50-R22-M Power Choke

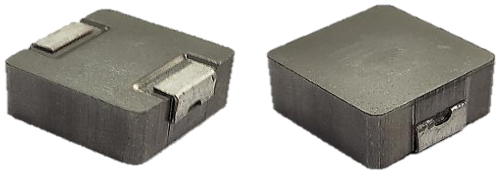

Description
- Halogen Free
- 125°C maximum total temperature operation
- 11.5x7.3x 5 .0mm maximum surface mount package
- Powder iron core material
- Magnetically shielded, low EMI
- High current carrying capacity, Low core losses
- RoHS compliant

Applications
- Voltage Regulator Module (VRM)
- Multi-phase regulators
- Point-of-load modules
- Smart phone POL modules
- SSD modules
- Notebook regulators
- Battery power systems
- Graphics cards
- Data networking and storage systems

Environmental Data
- Storage temperature range: -55°C to +125 °C
- Operating temperature range: -55°C to +125°C (ambient plus self-temperature rise)
- Solder reflow temperature: J-STD-020 compliant

Description		
HCMC-1007A50-R22-M	0.22μH	±20 %
Model	Inductance Value	Inductance Tolerance

Global Part Number			
H C M C	1 0 0 7 A 5 0	R 2 2	M
Product Series	Dimensions	Inductance Value	Tolerance

Part No.	Inductance	DC Resistance		Heating Rating Current	Saturation Current
	L0 (μH)	DCR (mΩ)		Idc (A)	Isat (A)
	±20 %, 100 kHz, 1V	TYP.	MAX.	TYP.	TYP.
HCMC-1007A50-R22-M	0.22	0.76	0.87	38.0	80.0

Notes

1. All test data is referenced to 25 °C ambient
2. Operating temperature range - 55 °C to + 125 °C
3. Idc(A):DC current (A) that will cause an approximate ΔT of 40 °C (reference ambient temperature is 25 °C)
4. Isat(A):DC current (A) that will cause L0 to drop approximately 30 %
5. The part temperature (ambient + temp rise) should not exceed 125 °C under worst case operating conditions. Circuit design, component placement, PWB trace size and thickness, airflow and other cooling provisions all affect the part temperature. Part temperature should be verified in the end application.

• Dimensions-mm

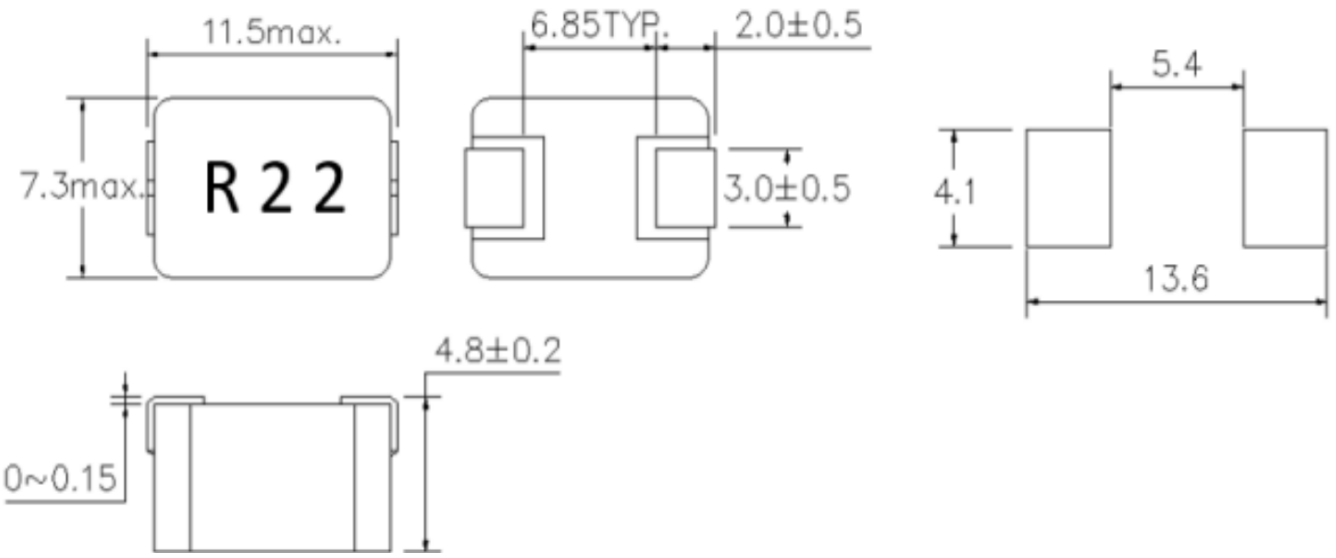

·Marking

The inductor is marked with a 3-digit code
Example - -0.22→R22
Note：Using Ink for marking

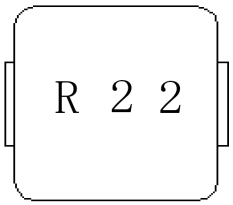

Performance Graphs	
Test Instruments	Test Condition
Wayne kerr 3260B/G LCR Meter Wayne kerr 3265B Bias Current Source	Temperature: 26 ± 3℃ Humidity: < 70% RH Frequency: 100 KHz, 1.0V
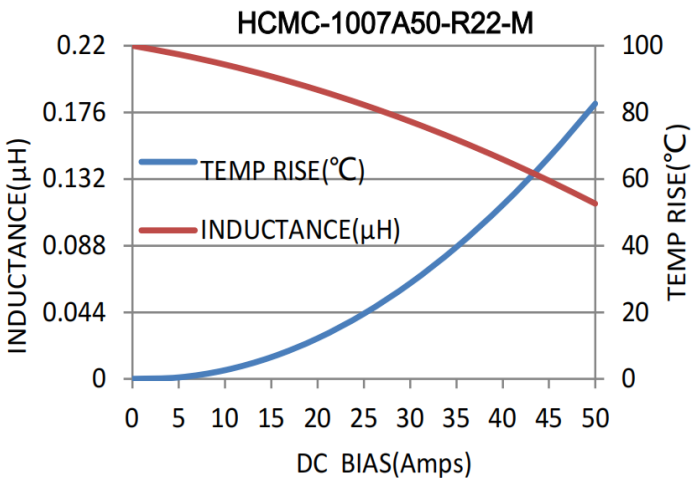	

Mechanical Reliability		
Item	Specification and Requirement	Test Method
Solderability	The surface of terminal immersed shall be minimum of 95% covered with a new coating of solder	Solder heat proof: 1. Precondition: 8 hours steam aging 2. Retention time: 245 ± 5 ℃ for 5+0/-0.5sseconds
Vibration	Inductance change: Within ± 10% Without mechanical damage such as break	1. Vibration frequency:(10 Hz to 2000 Hz) 2. Vibration time:Each four hours (12 times) in X, Y, Z direction: 12 hours in total 3. Amplitude: 1.524 mm(0.06 inch) or 10 g
Shock	Inductance change: Within ± 10% Without mechanical damage such as break	1. Peak value: 100 g 2. Duration of pulse: 6ms 3. Waveform: Half-sine Shocks; 3 times in ±X, ±Y, ±Z direction, 18 times in total
Endurance Reliability		
Item	Specification and Requirement	Test Method
Thermal Shock	Inductance change: Within ± 10% Without distinct damage in appearance	1. Repeat 1000 cycles as follow: (-55 ± 2 ℃; 30 ± 3 min) → (+125 ± 2 ℃, 30 ± 3 min) change over time of temperature: ≤10s 2. Recovery: 24 + 4 / -0 hours of recovery under the standard condition after the test.
High Temperature &Humidity	Inductance change: Within ± 10% Without distinct damage in appearance	85℃85%RH， Duration:240+4/-0 hours
Operational Life	Inductance change: Within ± 10% Without distinct damage in appearance	1.Rated current（Idc） Environment condition: 85 ℃ 2.Duration: 1000 + 4 / -0 hours
Low Temperature Store	Inductance change: Within ± 10% Without distinct damage in appearance	Store temperature: -55 ± 2 ℃,1000 + 4 / -0 hours
High Temperature Store	Inductance change: Within ± 10% Without distinct damage in appearance	Store temperature: +125 ± 2 ℃,1000 + 4 / -0 hours

Tape Packaging Dimensions

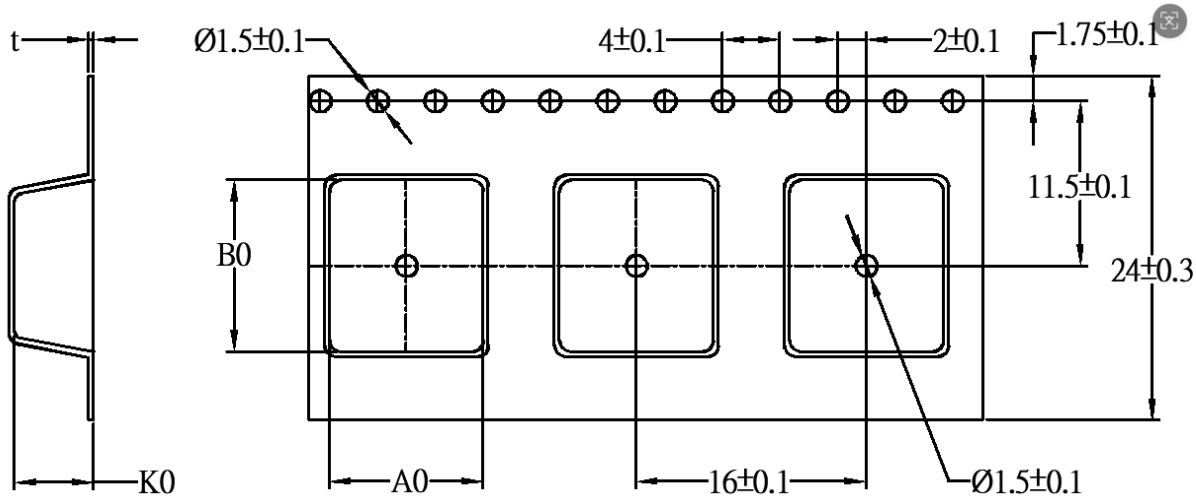

A0	B0	K0	t
7.8±0.1	12.0±0.1	5.5±0.15	0.5±0.05

Reel Dimensions

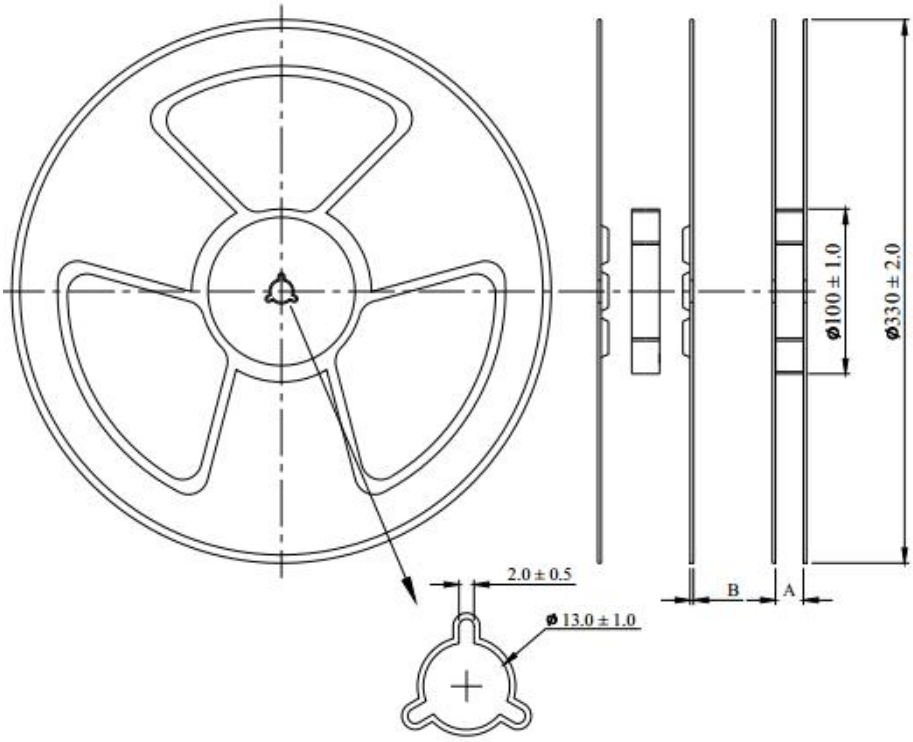

	A	B
mm	24.5 ± 0.2	2.0 ± 0.2

• Peel force of top cover tape

The peel speed shall be about 300mm/minute

The peel force of top cover tape shall be between 0.1 to 1.3 N

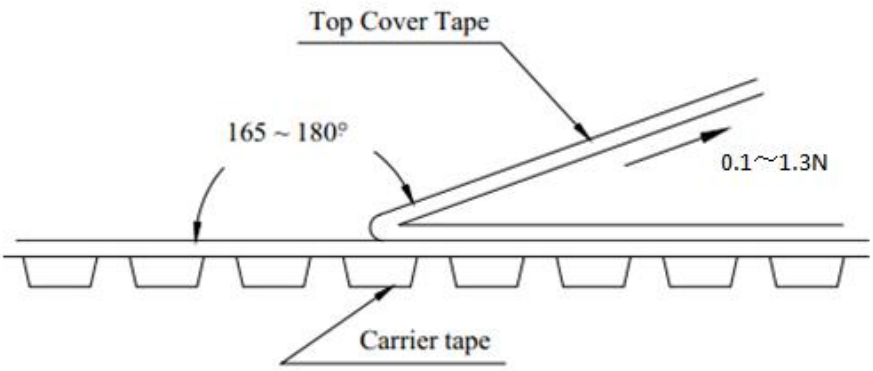

• Numbers of taping

500pieces/reel