NOTES:

1.HUOSING: LCP HIGH-TEMP THERMOPLASTIC UL94V-0 COLOR:BLACK
2.TERMINAL/GROUND PLANE:PHOSPHOR BRONZE
PLATING:10u'' GOLD IN CONTACT AREA, MATTE TIN ON TAIL.
3.CODING INFORMATION: LXW232-xxxS-B3R-01

- WATER CODE
- PACKING: R: CARRIER REEL
- MATERIAL: 3:LCP
- COLOR: B:BLACK
- S:SOCKET / PIN
- PLATING: G:GOLD FLASH 2:3u'' GOLD IN CONTACT AREA, MATTE TIN ON TAIL.
  3:5u'' GOLD IN CONTACT AREA, MATTE TIN ON TAIL.
  4:10u'' GOLD IN CONTACT AREA, MATTE TIN ON TAIL.
  5:15u'' GOLD IN CONTACT AREA, MATTE TIN ON TAIL.
  6:30u'' GOLD IN CONTACT AREA, MATTE TIN ON TAIL.
- 0.5 BTB
  HIGHLY: 32--3.25H
- LXWCONN BTB CONNECTOR SERIES

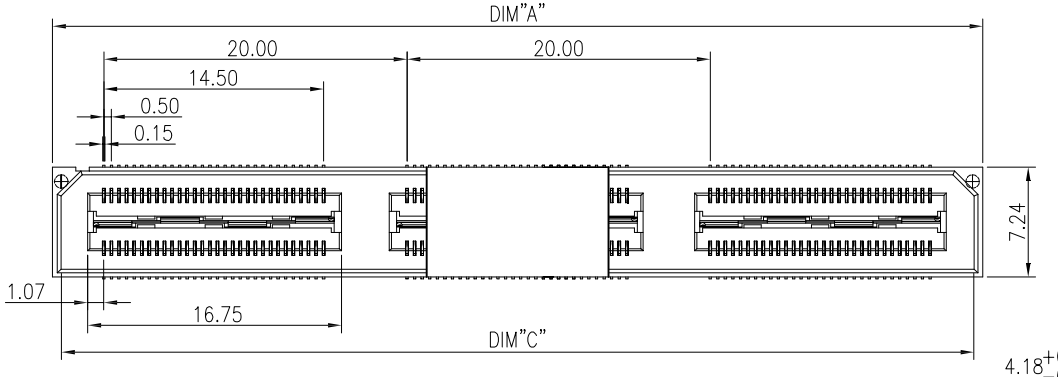

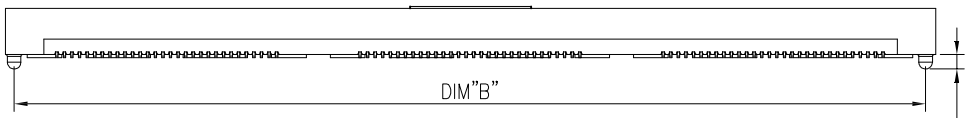

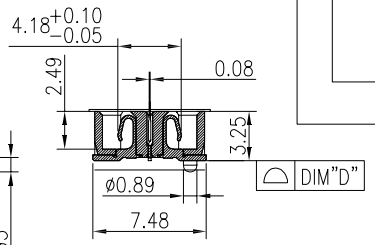

SECTION A-A

NO. of contacts	Dimensions			
	A.	B.	C.	D.
60	21.38	20.13	20.18	0.10
120	41.38	40.13	40.18	0.10
180	61.38	60.13	60.18	0.20
240	81.38	80.13	80.18	0.20
300	101.38	100.13	100.18	0.20

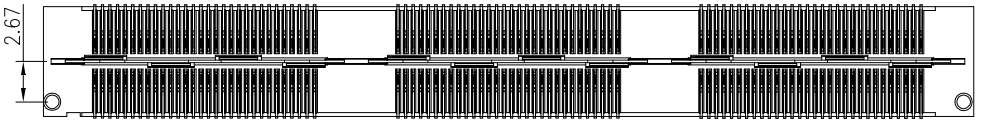

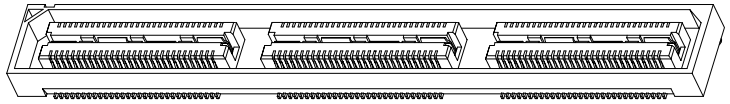

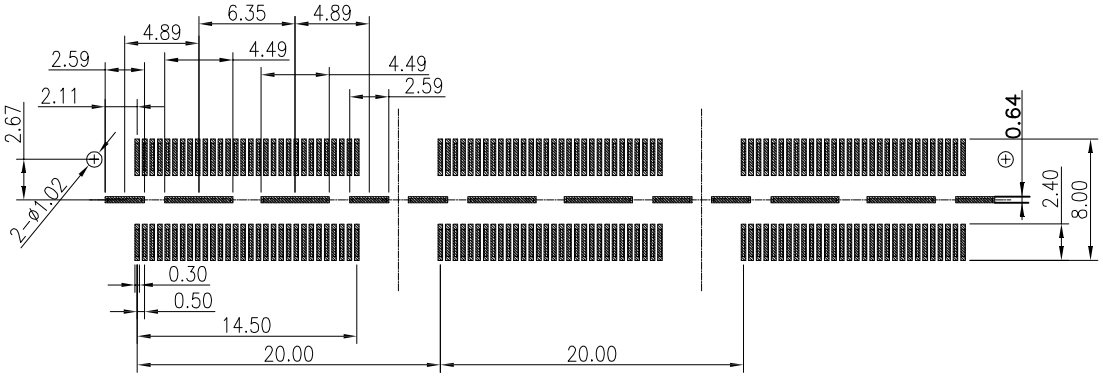

RECOMMENDED PCB PATTERN DIM.

TOLERANCE : ±0.05

RoHS Compliant 2013/95/EC

LXW 连兴旺电子(深圳)有限公司
connectivity LXWCONN ELECTRONICS(SHENZHEN)CO.,LTD

修订 SHR	修改摘要 REVISION DESCRIPTION	签名 SIGNATURE	日期 DATE

一般公差 GENERAL TOLERANCE: .X ±0.30; .XX ±0.20; .XXX ±0.10; ANGLES ±0° 30'

制图 (DR): Lujunhui 2018.12.11	品名(TITLE): 0.5mm DOUBLE ROW BTB SOCKET H3.25		
审核 (CHKD):	料号(PART NO): LXW232-XXXS-B3R-01		
版本 (REV) A	核准 (APPD):	比例(SCALE) 1:1	单位(UNITS) mm	张数(SHEET) 1 OF 1	图幅(SIZE) A4