NOTE:
1.Current Rating: 2A (one pins powered per row)
2.Voltage Rating 160VAC
3.Operating Temperature Range:−55°c to +125°c
4.Withstanding Voltage:470VAC
5.Insulation Resistance: 1000 MΩ
6.Contact Resistance:30mΩ maximun

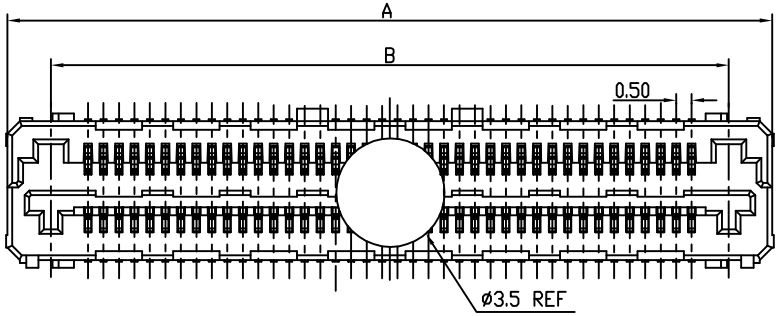

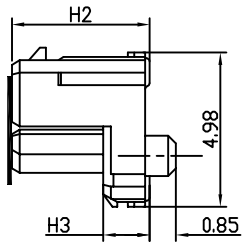

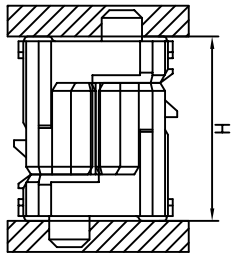

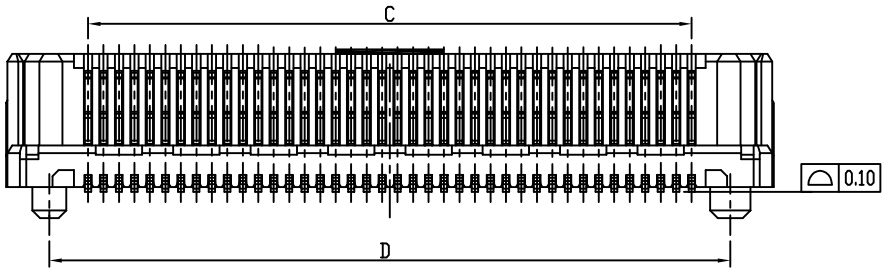

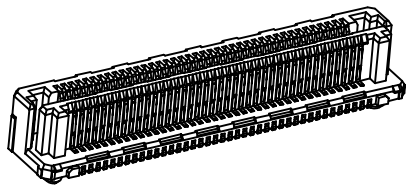

MATED HEIGHT				
	2.5	3.0	4.0	6.0
2.5	5.00	5.50	6.50	8.50
3.0		6.00	7.00	9.00
4.0			8.00	10.00
6.0				12.00

TABLE 1		
H1	H2	H3
2.5	3.95	1.00
3.0	4.45	1.50
4.0	5.45	2.50
6.0	7.45	4.50

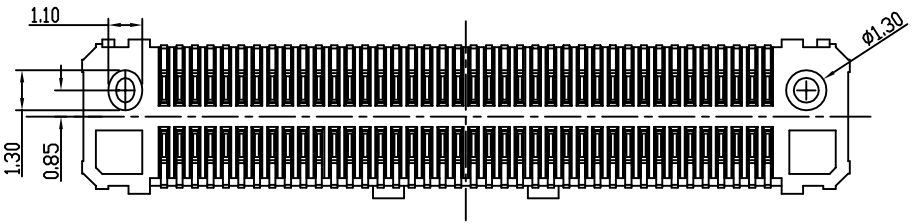

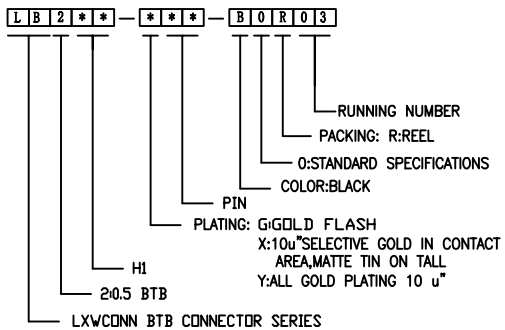

TABLE 2				
PIN	A	B	C	D
10	7.20	4.40	2.00	4.50
12	7.70	4.90	2.50	5.00
14	8.20	5.40	3.00	5.50
16	8.70	5.90	3.50	6.00
18	9.20	6.40	4.00	6.50
20	9.70	6.90	4.50	7.00
22	10.20	7.40	5.00	7.50
24	10.70	7.90	5.50	8.00
26	11.20	8.40	6.00	8.50
28	11.70	8.90	6.50	9.00
30	12.20	9.40	7.00	9.50
32	12.70	9.90	7.50	10.00
34	13.20	10.40	8.00	10.50
36	13.70	10.90	8.50	11.00
40	14.70	11.90	9.50	12.00
42	15.20	12.40	10.00	12.50
44	15.70	12.90	10.50	13.00
50	17.20	14.40	12.00	14.50
60	19.70	16.90	14.50	17.00
64	20.70	17.90	15.50	18.00
70	22.20	19.40	17.00	19.50
80	24.70	21.90	19.50	22.00
90	27.20	24.40	22.00	24.50
100	29.70	26.90	24.50	27.00
110	32.20	29.40	27.00	29.50
120	34.70	31.90	29.50	32.00
130	37.20	34.40	32.00	34.50
140	39.70	36.90	34.50	37.00
150	42.20	39.40	37.00	39.50
160	44.70	41.90	39.50	42.00

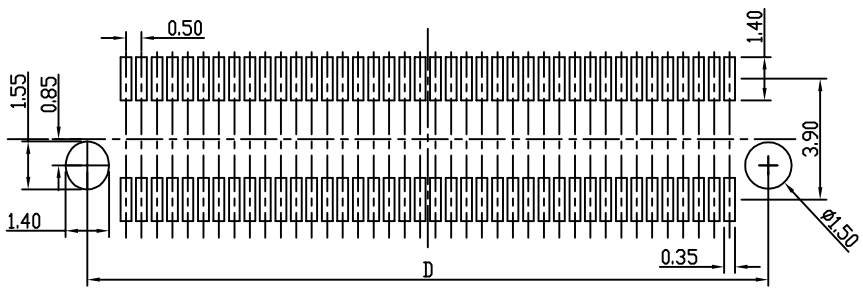

Recommended PC board pattern

MATERIAL:
INSULATOR: LCP, UL94-V0; COLOR: BLACK
CONTACT OR TERMINAL: PHOSBRONZE

RoHS Compliant 2013/95/EC

修订 SER	修 改 摘 要 REVISION DESCRIPTION	签 名 SIGNATURE	日期 DATE

一 般 公 差 GENERAL TOLERANCE
.X ±0.35
.XX ±0.25
.XXX ±0.10
ANGLES ±1°

版本 (REV) A

LXW connectivity 连兴旺电子(深圳)有限公司
LXWCONN ELECTRONICS(SHENZHEN)CO.,LTD

制图 (DR): Jerry 2020.04.10	品名(TITLE): 0.5mm TERMINAL/SOCKET COMBO		
审核 (CHKD):	料号(PART NO): LB2**-***-BOR03		
核准 (APPD): Tong 2020.04.10	比例(SCALE) 1:1	单位(UNITS) mm	张数(SHEET) 1 OF 1	图幅(SIZE) A4