SAMZO | REAC/ROHS

REV	ECN NO	DESRIPTION	DESIGN	APPROVAL	DATE
A1	NEW	Replace frame			2018.06.12

Technical Requirements:
→.Frequency: 0 ～ 6GHz
→.Impedance: 50 Ω
→.Voltage Standing Wave Ratio (VSWR): ≤ 1.8
→.Operating Voltage: 335V
→.Withstand Voltage: 1000V
→.Insulation Resistance: ≥ 5000M Ω
→.Contact Resistance: Inner conductor ≤ 3 mΩ
Outer conductor ≤ 2 mΩ
→.Insertion Loss: ≤ 0.5dB

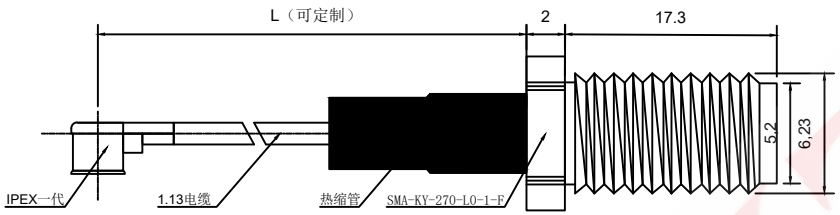

SMA-KY-IP-F0-*

- Wire length线长:L=可定制
- Series number系列编号:F0-C01
- Butt joint end对接端:IPEX-1代
- Product number编号:KY-IPEX
- Product series系列:SMA同轴连接线

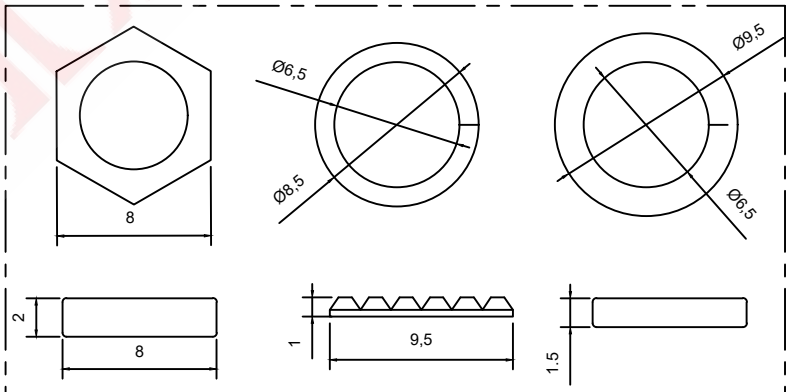

螺母2.0/垫片1.0/齿垫1.0/防水圈1.5

ITEM	DESCRIPTION	MATERIAL	QTY	FINSH/COLOR					
F	线材	1.13mm电缆	1	黑色					
E	热缩管	高抗热缩	1	黑色				GENERAL TOLERANCE	
D	防水圈	硅胶	1	黑色				≥0~2<	±0.15
C	插孔	HPB59-1	1	------	DESIGN	WANGGUIFA	2018.06.12	≥2~5<	±0.25
B	绝缘体	聚四氟乙烯	1	白色	CHECKED	ZHENGUILAN	2018.06.12	≥0~2<	±0.15
A	主体	黄铜	1	镀金	APPROVED	LILIANJIANG	2018.06.14	≥5	±0.35

FIRST VIEW

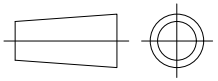

SCALE 1:1 UNIT mm

The copyright belongs to samzo parts [China] Co., Ltd. please use the material after samzo parts agree to authorize. The final right of interpretation belongs to samzo parts.
WWW.KKK-JP.COM

SAMZO COMPONENTS
Electronic switch and connector manufacturer

TITLE:: IPEX转SMA-KY转接线
DWG NO: SMAKY-F001
PART NO: SMAKY-23015C0
MODEL NO: SMA-KY-IP-F0-X
NAME: SMA COAXIAL RF CONNECTOR