REV	ECN NO	DESRIPTION	DESIGN	APPROVAL	DATE
A1	NEW	Replace frame			2020.06.12

ROHS

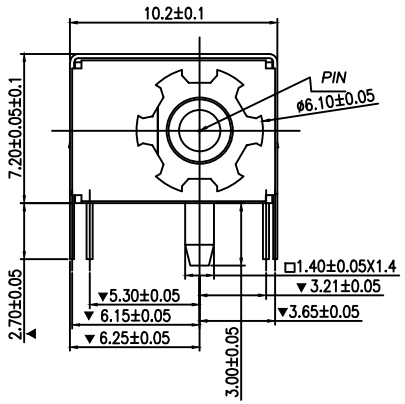

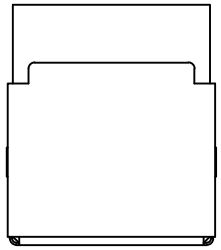

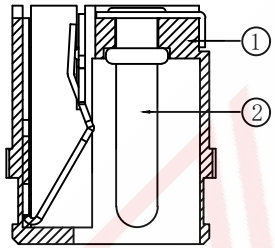

Main Technical Performance

1. Rated Electrical Load: 30V 3A
2. Insulation Resistance: ≥100MΩ
3. Withstand Voltage: AC500V (50Hz)/min
4. Insertion & Extraction Force: 5～25N
5. Service Life: 5,000 cycles

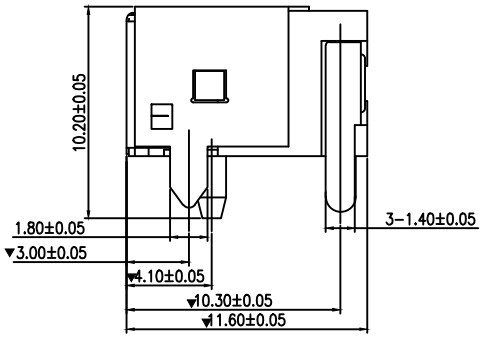

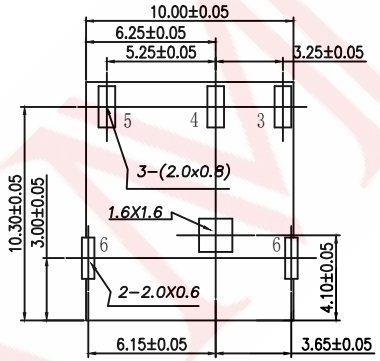

P.C.B LAYOUT TOP VIEW

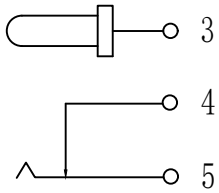

9C W 5 116 A T * H

- Model Definition
- Mould Number: MX044-2
- Needle Diameter: F-2.0/G-2.5 mm
- Fixing Method: With fixed column
- Interface Method: Conventional Interface
- Overall Length: 11.6 mm
- Pin Position: 5 Pins
- Mounting Method: Horizontal(DIP)
- Product Series: DC Power Jacks

序号	名 称	数量	材 料	备 注
7	公头扣	1	磷铜带 t=0.10mm	镀镍
6	盖 脚	1	黄铜带 t=0.20mm	镀镍
5	弹片脚	1	磷铜带 t=0.30mm	镀银
4	插片脚	1	黄铜带 t=0.30mm	镀银
3	平 片	1	黄铜带 t=0.30mm	镀银
2	圆 针	1	黄铜带 t=0.30mm	镀镍
1	基 座	1	PPA	黑色

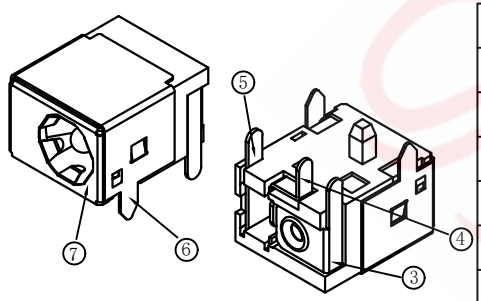

DESIGN	WANGGUIFA	2018.06.12	
CHECKED	ZHENGUILAN	2018.06.12	
APPROVED	LILIANJIANG	2018.06.14	

GENERAL TOLERANCE

≥0~2<	±0.15
≥2~5<	±0.25
≥0~2<	±0.15
≥5	±0.35

FIRST VIEW

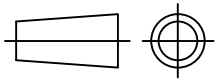

SCALE	1:1	UNIT	mm

The copyright belongs to samzo parts [China] Co., Ltd. please use the material after samzo parts agree to authorize. The final right of interpretation belongs to samzo parts.
WWW.KKK-JP.COM

SAMZO COMPONENTS

Electronic switch and connector manufacturer

TITLE:: 大电流侧卧式5PIN长定位

DWG NO: 9CW5116-044A

PART NO: 9CW51160001

MODEL NO: 9CW5116AT-*-H

NAME: DC JACK