78M05-78M24

Features:

- ☐ Output Current up to 0.5A
- ☐ Output Voltages of 5, 6, 8, 9, 12, 15, 18, 24V
- ☐ Thermal Overload Protection Short Circuit Protection
- ☐ Output Transistor Safe Operating area (SOA)Protection

TO-251 TO-252

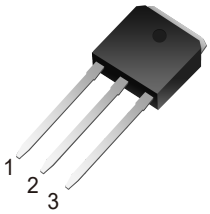

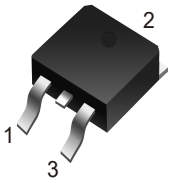

SOT-223

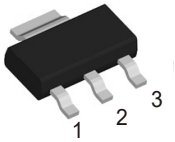

1.Input (I)
2.GND (G)
3.Output (O)

Absolute Maximum Ratings

PARAMETER		SYMBOL	RATINGS	UNIT
Input Voltage		V_{IN}	35	V
Output Current		I_{OUT}	0.5	A
Power Dissipation (T_C=25°C)	SOT-223	P_D	1	W
	TO-252 TO-251		2	
Operating Junction Temperature		T_J	-20 ~ 125	℃
Storage Temperature		T_{STG}	-55 ~ +150	℃

Thermal Data

PARAMETER		SYMBOL	RATINGS	UNIT
Junction to Case	SOT-223	θ_{JC}	15	°C/W
	TO-252 TO-251		12.5	

Electrical Characteristics（78M05）

(Refer to the test circuits, 0 < T_J < +125°C, I_O=350mA, V_I=10V, unless otherwise specified, C_I = 0.33μF, C_O=0.1μF)

Parameter	Symbol	Conditions		Value			Unit
				Min	Typ	Max	
Output Voltage	V_O	I_O= 5mA ~ 350mA V_I = 7 ~ 20V		4.75	5	5.25	V
Line Regulation(Note)	ΔV_O	I_O = 200mA Tj = 25°C	V_I = 7V ~ 25V			100	mV
			V_I = 8V ~ 25V			50	
Load Regulation(Note)	ΔV_O	Tj = 25°C	I_O= 5mA ~ 500mA			100	mV
			I_O= 5mA ~ 200mA			50	
Quiescent Current	I_Q	Tj = 25°C				6.0	mA
Quiescent Current Change	ΔI_Q	I_O=5mA ~ 350mA				0.5	mA
		I_O = 200mA , V_I = 8 ~ 25V				0.8	
Output Voltage Drift	$\Delta V / \Delta T$	I_O = 5mA , Tj = 0 ~ 125°C			-0.5		mV/°C
Output Noise Voltage	V_N	f = 10Hz ~ 100KHz			40		μV
Ripple Rejection	RR	f = 120Hz, V_I = 8 ~18V			80		dB
Dropout Voltage	V_D	T j =25°C, I_O = 500mA			2		V
Short Circuit Current	I_{SC}	T j =25 , V_I= 35V			800		mA
Peak Current	I_{PK}	T j = 25°C			900		mA

Notes:

Load and line regulation are specified at constant junction temperature. Change in Vo due to heating effects must be taken into account separately. Pulse testing with low duty is used.

Electrical Characteristics（78M06）

(Refer to the test circuits, 0 < T_J < +125°C, I_O=350mA, V_I=11V, unless otherwise specified, C_I = 0.33μF, C_O=0.1μF)

Parameter	Symbol	Conditions		Value			Unit
				Min	Typ	Max	
Output Voltage	V_O	I_O= 5mA ~ 350mA V_I = 8 ~ 21V		5.7	6	6.3	V
Line Regulation(Note)	ΔV_O	I_O = 200mA Tj = 25°C	V_I = 8V ~ 25V			100	mV
			V_I = 9V ~ 25V			50	
Load Regulation(Note)	ΔV_O	Tj = 25°C	I_O= 5mA ~ 500mA			120	mV
			I_O= 5mA ~ 200mA			60	
Quiescent Current	I_Q	Tj = 25°C				6.0	mA
Quiescent Current Change	ΔI_Q	I_O=5mA ~ 350mA				0.5	mA
		I_O = 200mA , V_I = 9 ~ 25V				0.8	
Output Voltage Drift	$\Delta V / \Delta T$	I_O = 5mA , Tj = 0 ~ 125°C			-0.5		mV/°C
Output Noise Voltage	V_N	f = 10Hz ~ 100KHz			45		μV
Ripple Rejection	RR	f = 120Hz, V_I = 9 ~ 19V			80		dB
Dropout Voltage	V_D	T j =25°C, I_O = 500mA			2		V
Short Circuit Current	I_{SC}	T j =25 , V_I= 35V			800		mA
Peak Current	I_{PK}	T j =25°C			900		mA

Notes:

Load and line regulation are specified at constant junction temperature. Change in Vo due to heating effects must be taken into account separately. Pulse testing with low duty is used.

Electrical Characteristics（78M08）

(Refer to the test circuits, 0 < T_J < +125°C, I_O=350mA, V_I=14V, unless otherwise specified, C_I = 0.33μF, C_O=0.1μF)

Parameter	Symbol	Conditions		Value			Unit
				Min	Typ	Max	
Output Voltage	V_O	I_O= 5mA ~ 350mA V_I = 10.5 ~ 23V		7.6	8	8.4	V
Line Regulation(Note)	ΔV_O	I_O = 200mA Tj = 25°C	V_I = 10.5V ~ 25V			100	mV
			V_I = 11V ~ 25V			50	
Load Regulation(Note)	ΔV_O	Tj = 25°C	I_O= 5mA ~ 500mA			160	mV
			I_O= 5mA ~ 200mA			80	
Quiescent Current	I_Q	Tj = 25°C				6.0	mA
Quiescent Current Change	ΔI_Q	I_O=5mA ~ 350mA				0.5	mA
		I_O = 200mA , V_I = 10.5 ~ 25V				0.8	
Output Voltage Drift	$\Delta V / \Delta T$	I_O = 5mA , Tj = 0 ~ 125°C			-0.8		mV/°C
Output Noise Voltage	V_N	f = 10Hz ~ 100KHz			52		μV
Ripple Rejection	RR	f = 120Hz, V_I = 11.5 ~ 21.5V			80		dB
Dropout Voltage	V_D	T j =25°C, I_O = 500mA			2		V
Short Circuit Current	I_{SC}	T j =25 , V_I= 35V			800		mA
Peak Current	I_{PK}	T j =25°C			900		mA

Notes:

Load and line regulation are specified at constant junction temperature. Change in Vo due to heating effects must be taken into account separately. Pulse testing with low duty is used.

Electrical Characteristics（78M09）

(Refer to the test circuits, 0 < T_J < +125°C, I_O=350mA, V_I=15V, unless otherwise specified, C_I = 0.33μF, C_O=0.1μF)

Parameter	Symbol	Conditions		Value			Unit
				Min	Typ	Max	
Output Voltage	V_O	I_O= 5mA ~ 350mA V_I = 11.5 ~ 24V		8.45	9	9.55	V
Line Regulation(Note)	ΔV_O	I_O = 200mA Tj = 25°C	V_I = 11.5V ~ 25V			100	mV
			V_I = 12V ~ 25V			50	
Load Regulation(Note)	ΔV_O	Tj = 25°C	I_O= 5mA ~ 500mA			180	mV
			I_O= 5mA ~ 200mA			90	
Quiescent Current	I_Q	Tj = 25°C				6.0	mA
Quiescent Current Change	ΔI_Q	I_O=5mA ~ 350mA				0.5	mA
		I_O = 200mA , V_I = 11.5 ~ 25V				0.8	
Output Voltage Drift	$\Delta V / \Delta T$	I_O = 5mA , Tj = 0 ~ 125°C			-0.8		mV/°C
Output Noise Voltage	V_N	f = 10Hz ~ 100KHz			52		μV
Ripple Rejection	RR	f = 120Hz, V_I = 12.5 ~ 22.5V			80		dB
Dropout Voltage	V_D	T j =25°C, I_O = 500mA			2		V
Short Circuit Current	I_{SC}	T j =25 , V_I= 35V			800		mA
Peak Current	I_{PK}	T j =25°C			900		mA

Notes:

Load and line regulation are specified at constant junction temperature. Change in Vo due to heating effects must be taken into account separately. Pulse testing with low duty is used.

Electrical Characteristics（78M12）

(Refer to the test circuits, 0 < T_J < +125°C, I_O=350mA, V_I=19V, unless otherwise specified, C_I = 0.33μF, C_O=0.1μF)

Parameter	Symbol	Conditions		Value			Unit
				Min	Typ	Max	
Output Voltage	V_O	I_O= 5mA ~ 350mA V_I = 14.5 ~ 27V		11.4	12	12.6	V
Line Regulation(Note)	ΔV_O	I_O = 200mA Tj = 25°C	V_I = 14.5V ~ 30V			100	mV
			V_I = 16V ~ 30V			50	
Load Regulation(Note)	ΔV_O	Tj = 25°C	I_O= 5mA ~ 500mA			240	mV
			I_O= 5mA ~ 200mA			120	
Quiescent Current	I_Q	Tj = 25°C				6.0	mA
Quiescent Current Change	ΔI_Q	I_O=5mA ~ 350mA				0.5	mA
		I_O = 200mA , V_I = 14.5 ~ 30V				0.8	
Output Voltage Drift	$\Delta V / \Delta T$	I_O = 5mA , Tj = 0 ~ 125°C			-0.8		mV/°C
Output Noise Voltage	V_N	f = 10Hz ~ 100KHz			75		μV
Ripple Rejection	RR	f = 120Hz, V_I = 15 ~ 25V			80		dB
Dropout Voltage	V_D	T j =25°C, I_O = 500mA			2		V
Short Circuit Current	I_{SC}	T j =25 , V_I= 35V			800		mA
Peak Current	I_{PK}	T j =25°C			900		mA

Notes:

Load and line regulation are specified at constant junction temperature. Change in Vo due to heating effects must be taken into account separately. Pulse testing with low duty is used.

Electrical Characteristics（78M15）

(Refer to the test circuits, 0 < T_J < +125°C, I_O=350mA, V_I=23V, unless otherwise specified, C_I = 0.33μF, C_O=0.1μF)

Parameter	Symbol	Conditions		Value			Unit
				Min	Typ	Max	
Output Voltage	V_O	I_O= 5mA ~ 350mA V_I = 17.5 ~ 30V		14.25	15	15.75	V
Line Regulation(Note)	ΔV_O	I_O = 200mA Tj = 25°C	V_I = 17.5V ~ 30V			100	mV
			V_I = 20V ~ 30V			50	
Load Regulation(Note)	ΔV_O	Tj = 25°C	I_O= 5mA ~ 500mA			300	mV
			I_O= 5mA ~ 200mA			150	
Quiescent Current	I_Q	Tj = 25°C				6.0	mA
Quiescent Current Change	ΔI_Q	I_O=5mA ~ 350mA				0.5	mA
		I_O = 200mA , V_I = 17.5 ~ 30V				0.8	
Output Voltage Drift	$\Delta V / \Delta T$	I_O = 5mA , Tj = 0 ~ 125°C			-1.0		mV/°C
Output Noise Voltage	V_N	f = 10Hz ~ 100KHz			100		μV
Ripple Rejection	RR	f = 120Hz, V_I = 18.5 ~ 28.5V			70		dB
Dropout Voltage	V_D	T j =25°C, I_O = 500mA			2		V
Short Circuit Current	I_{SC}	T j =25 , V_I= 35V			800		mA
Peak Current	I_{PK}	T j =25°C			900		mA

Notes:

Load and line regulation are specified at constant junction temperature. Change in Vo due to heating effects must be taken into account separately. Pulse testing with low duty is used.

Electrical Characteristics（78M18）

(Refer to the test circuits, 0 < T_J < +125°C, I_O=350mA, V_I=26V, unless otherwise specified, C_I = 0.33μF, C_O=0.1μF)

Parameter	Symbol	Conditions		Value			Unit
				Min	Typ	Max	
Output Voltage	V_O	I_O= 5mA ~ 350mA V_I = 20.5 ~ 33V		17.1	18	18.9	V
Line Regulation(Note)	ΔV_O	I_O = 200mA Tj = 25°C	V_I = 21V ~ 33V			100	mV
			V_I = 24V ~ 33V			50	
Load Regulation(Note)	ΔV_O	Tj = 25°C	I_O= 5mA ~ 500mA			360	mV
			I_O= 5mA ~ 200mA			180	
Quiescent Current	I_Q	Tj = 25°C				6.0	mA
Quiescent Current Change	ΔI_Q	I_O=5mA ~ 350mA				0.5	mA
		I_O = 200mA , V_I = 21 ~ 33V				0.8	
Output Voltage Drift	$\Delta V / \Delta T$	I_O = 5mA , Tj = 0 ~ 125°C			-1.2		mV/°C
Output Noise Voltage	V_N	f = 10Hz ~ 100KHz			100		μV
Ripple Rejection	RR	f = 120Hz, V_I = 22 ~ 32V			70		dB
Dropout Voltage	V_D	T j =25°C, I_O = 500mA			2		V
Short Circuit Current	I_{SC}	T j =25 , V_I= 35V			800		mA
Peak Current	I_{PK}	T j =25°C			900		mA

Notes:

Load and line regulation are specified at constant junction temperature. Change in Vo due to heating effects must be taken into account separately. Pulse testing with low duty is used.

Electrical Characteristics（78M24）

(Refer to the test circuits, 0 < T_J < +125°C, I_O=350mA, V_I=33V, unless otherwise specified, C_I = 0.33μF, C_O=0.1μF)

Parameter	Symbol	Conditions		Value			Unit
				Min	Typ	Max	
Output Voltage	V_O	I_O= 5mA ~ 350mA V_I = 27 ~ 38V		22.8	24	25.2	V
Line Regulation(Note)	ΔV_O	I_O = 200mA Tj = 25°C	V_I = 27V ~ 38V			100	mV
			V_I = 28V ~ 38V			50	
Load Regulation(Note)	ΔV_O	Tj = 25°C	I_O= 5mA ~ 500mA			480	mV
			I_O= 5mA ~ 200mA			240	
Quiescent Current	I_Q	Tj = 25°C				6.0	mA
Quiescent Current Change	ΔI_Q	I_O=5mA ~ 350mA				0.5	mA
		I_O = 200mA , V_I = 27 ~ 38V				0.8	
Output Voltage Drift	$\Delta V / \Delta T$	I_O = 5mA , Tj = 0 ~ 125°C			-1.2		mV/°C
Output Noise Voltage	V_N	f = 10Hz ~ 100KHz			170		μV
Ripple Rejection	RR	f = 120Hz, V_I = 28 ~ 38V			70		dB
Dropout Voltage	V_D	T j =25°C, I_O = 500mA			2		V
Short Circuit Current	I_{SC}	T j =25 , V_I= 35V			800		mA
Peak Current	I_{PK}	T j =25°C			900		mA

Notes:

Load and line regulation are specified at constant junction temperature. Change in Vo due to heating effects must be taken into account separately. Pulse testing with low duty is used.

Application Circuit

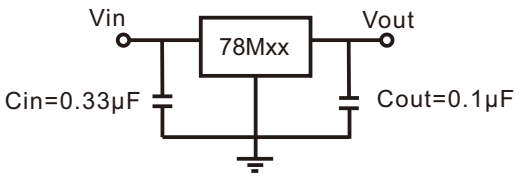

Electrical Characteristic Curve

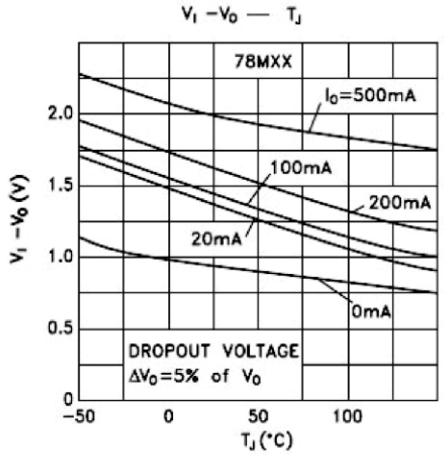

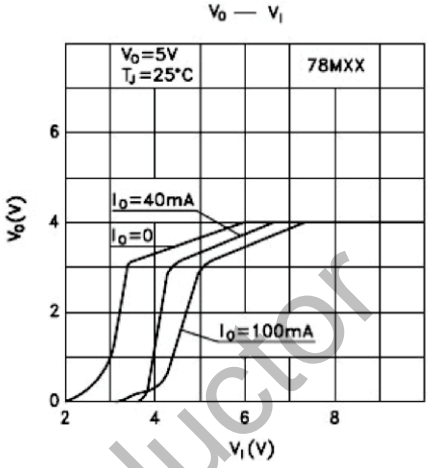

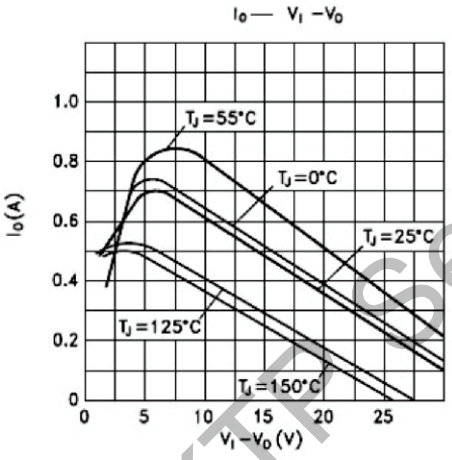

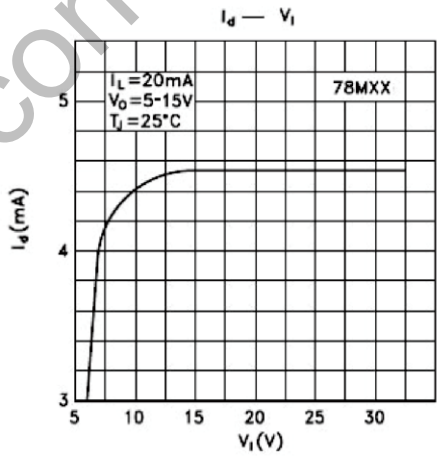

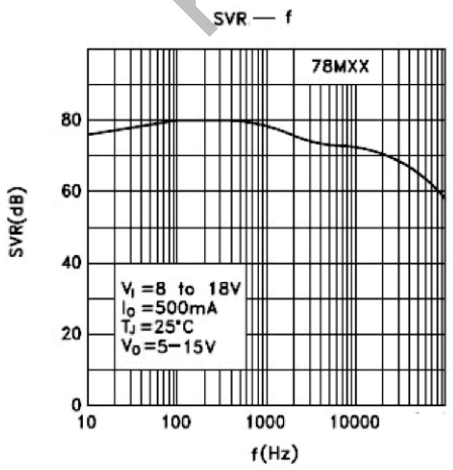

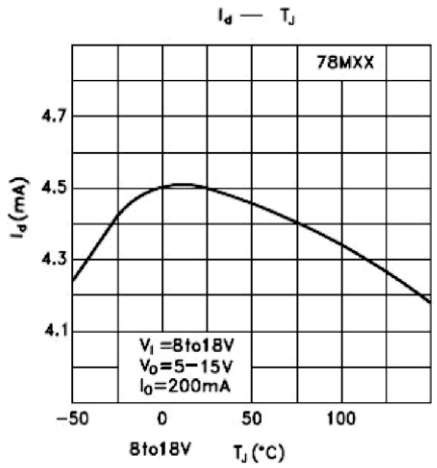

Package Dimension

TO-252

Unit: mm

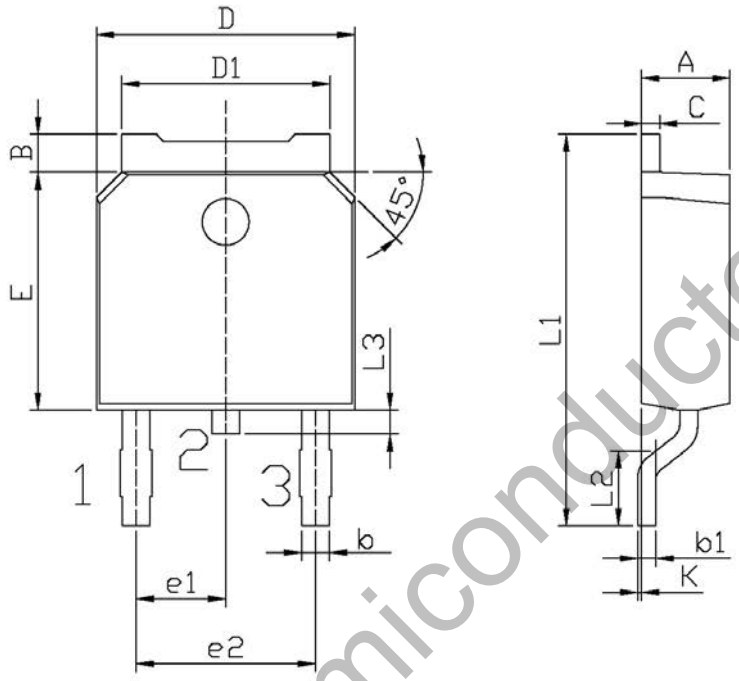

单位：mm

Symbol	Dimensions In Millimeters		Symbol	Dimensions In Millimeters	
	Min	Max		Min	Max
A	2.20	2.40	E	5.95	6.25
B	0.95	1.25	e1	2.24	2.34
b	0.70	0.90	e2	4.43	4.73
b1	0.45	0.55	L1	9.85	10.35
C	0.45	0.55	L2	1.25	1.75
D	6.45	6.75	L3	0.60	0.90
D1	5.20	5.40	K	0.00	0.10

Package Dimension

TO-251(1)

Unit: mm

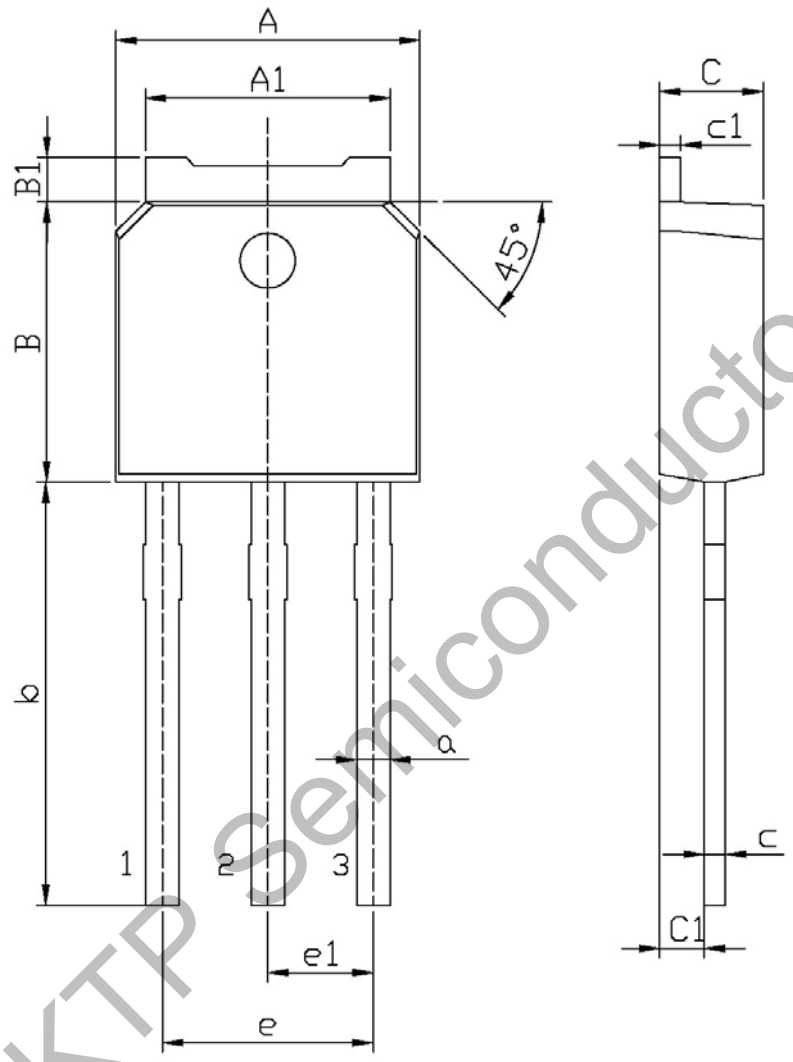

Symbol	Dimensions In Millimeters		Symbol	Dimensions In Millimeters	
	Min	Max		Min	Max
A	6.45	6.75	a	0.70	0.90
A1	5.20	5.40	b	9.00	9.40
B	5.95	6.25	c	0.45	0.55
B1	0.95	1.25	c1	0.45	0.55
C	2.20	2.40	e1	2.24	2.34
C1	0.95	1.15	e	4.43	4.73

Package Dimension

TO-251(2)

Unit: mm

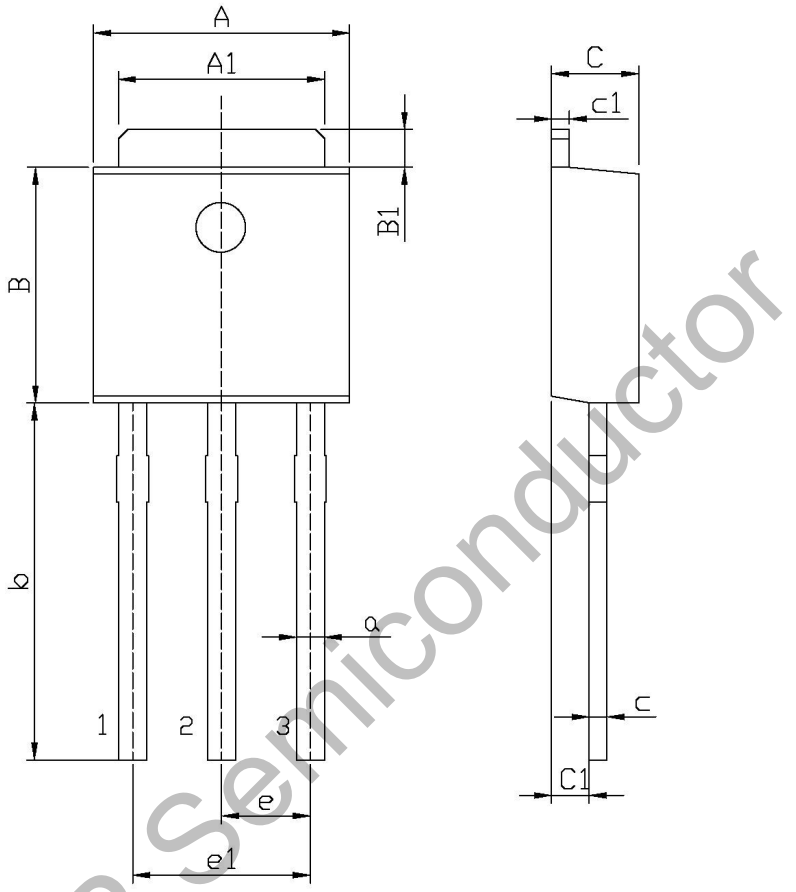

单位：mm

Symbol	Dimensions In Millimeters		Symbol	Dimensions In Millimeters	
	Min	Max		Min	Max
A	6.45	6.75	a	0.50	0.90
A1	5.10	5.50	b	9.00	9.40
B	5.95	6.25	c	0.45	0.55
B1	0.95	1.25	c1	0.45	0.55
C	2.20	2.40	e	2.24	2.34
C1	0.95	1.15	e1	4.43	4.73

Package Dimension

TO-223

Unit: mm

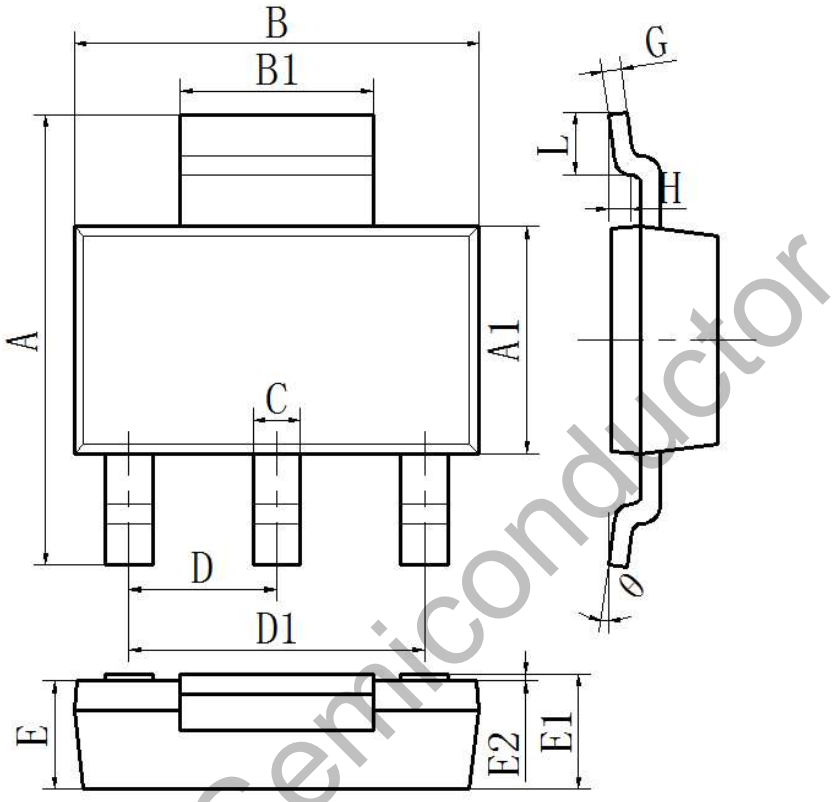

符号	标准	下公差	上公差	下限值	上限值
A	6.95	-0.24	0.24	6.71	7.19
A1	3.5	-0.1	0.1	3.4	3.6
B	6.4	-0.1	0.1	6.2	6.4
B1	3.00	-0.1	0.1	2.9	3.1
C	0.74	-0.08	0.08	0.66	0.82
D	2.3	-0.05	0.05	2.25	2.35
D1	4.6	-0.1	0.1	4.5	4.7
E	1.6	-0.1	0.1	1.5	1.7
E1	1.66	-0.14	0.14	1.52	1.8
E2(测试后)	/	/	/	0	0.1
E2（成型后）	/	/	/	0.02	0.08
G	0.3	-0.05	0.05	0.25	0.35
H	0.25	-0.05	0.05	0.20	0.30
L	0.95	-0.15	0.15	0.8	1.1
θ	8	/	/	8	8