RoHS

REVISIONS					
REV.	ECN NO.	LOCATION	DESCRIPTION	DATE	DESIGN
A0	N/A		INITIAL RELEASE	2024.08.12	

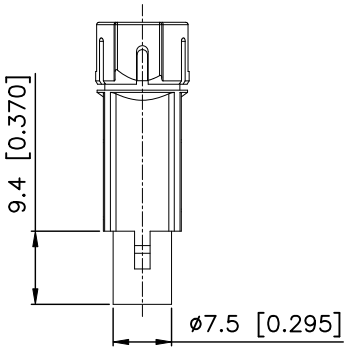

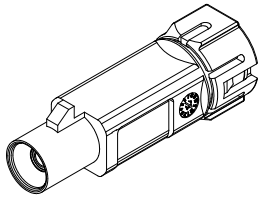

3D View

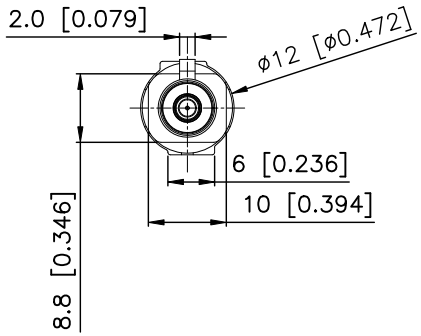

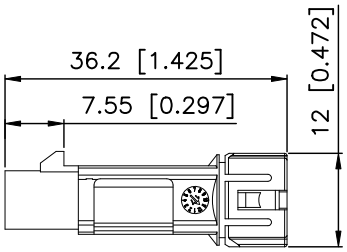

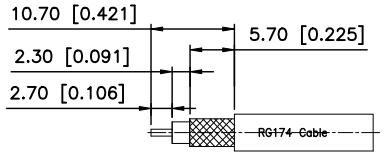

RECOMMENDED CABLE STRIPPING DIM'S

Specifications(规格)：

1.Impedance(特性阻抗)：50Ω;
2.Frequency（工作频率）：DC～6GHz;
3.VSWR（电压驻波比）：1.50@3GHz;
1.60@6GHz;
4.Insulation resistance(绝缘阻抗)：≥100MΩ;
5.Dielectric withstand voltage（介质耐电压）：800V AC;
6.Mating cycles（耐久性）：≥5 cycles; ;
7.Retention force latch(保持力)：≥110N;
8.Temperature range(使用温度)：-40℃～+105℃;
9.Waterproof Rating(防水等级)：IP67;

10.PART NO.:
XK1PLM1S3-WA06-X
└Code: A~Z

11.Housing P/N:
XKHM1-PT12-X
└Code: A~Z

BOM List:

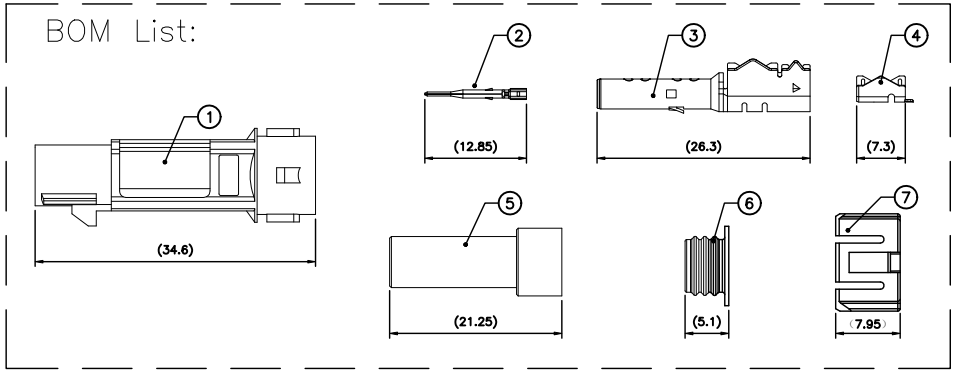

NO.	P/N	NAME	MATERIAL	FINISH (Contact)	Q'TY	Note
7	XKC0-PTB12	Cover	PBT		1 PC	
6	XKMY-RB03	Waterproof ring	Silicon Rubber		1 PC	
5	XKD-PTB09	Sheath	PBT		1 PC	
4	XKS3-PBT01	Outer Ferrule	Copper Alloy	Tin PLATED	1 PC	5K PCS/R
3	XKBM3-PBT231	Outer Conductor	Copper Alloy	Tin PLATED	1 PC	
2	XKTM3-PBGN601	Center Conductor	Copper Alloy	Gold PLATED	1 PC	5K PCS/R
1	XKHM1-PT12-X	Housing	PBT		1 PC	

www.helloxkb.com www.helloxkb.cn www.xk-dg.cn

ANGLAR	±5°
X.	±0.50
X.x	±0.30
X.xx	±0.15
X.xxx	±0.05
UNSPECIFIED TOLERANCES	

XKB 星坤 Connection

XKB INDUSTRIAL PRECISION CO.,LIMITED

DESIGN	希 文	VIEW:	MODEL TYPE: FAKRA Male Connector for RG174,IP67
CHECKED		UNIT: mm/in	PART NO.: XK1PLM1S3-WA06-X
APPROVED		SIZE: A4	DWG NO.: X-XK1PLM1S3-WA06-X

SCALE	PAGE	REVISION
N/A	1/2	A0

REVISIONS					
REV.	ECN NO.	LOCATION	DESCRIPTION	DATE	DESIGN
A0	N/A		INITIAL RELEASE	2024.08.12	

Code List:

Colde	A	B	C	D	E	F	G
Color/RAL-No.	Black/9005	White/9001	Blue/5005	Bordeaux/4004	Green/6002	Brown/8011	Grey/7031
PART NO.	XK1PLM1S3-WA06-A	XK1PLM1S3-WA06-B	XK1PLM1S3-WA06-C	XK1PLM1S3-WA06-D	XK1PLM1S3-WA06-E	XK1PLM1S3-WA06-F	XK1PLM1S3-WA06-G
Colde	H	I	K	L	M	N	Z
Color/RAL-No.	Violet/4003	Beige/1001	Curry/1027	Carmine red/3002	Pastel Orange/2003	Pastel Green/6019	Water Blue/5021
PART NO.	XK1PLM1S3-WA06-H	XK1PLM1S3-WA06-I	XK1PLM1S3-WA06-K	XK1PLM1S3-WA06-L	XK1PLM1S3-WA06-M	XK1PLM1S3-WA06-N	XK1PLM1S3-WA06-Z

ANGLAR	±5°
X.	±0.40
X.x	±0.30
X.xx	±0.15
X.xxx	±0.15
UNSPECIFIED TOLERANCES	

XKB Connection

DESIGN	希 文	VIEW:	MODEL TYPE: FAKRA Male Connector for RG174,IP67
CHECKED		UNIT: mm/in	PART NO.: XK1PLM1S3-WA06-X
APPROVED		SIZE: A4	DWG NO.: X-XK1PLM1S3-WA06-X

XKB INDUSTRIAL PRECISION CO.,LIMITED

SCALE	PAGE	REVISION
N/A	2/2	A0

NOTE: ALL RIGHTS RESERVED,BANNED COPY!