THIS DRAWING IS UNPUBLISHED. RELEASED FOR PUBLICATION 2011
© COPYRIGHT 2011 - ALL RIGHTS RESERVED.

LOC	DIST
A1	-

REVISIONS

P	LTR	DESCRIPTION	DATE	DWN	APVD
	C31	PCN-22-152671	15SEP2022	FRAN	UTZ
	C32	PCN-24-203357	22MAR2024	FRAN	RIES
	C33	PCN-24-226956	13NOV2024	FRAN	RIES
	D	PCN-25-239030. PIN MATERIAL HARMONIZATION	06OCT2025	STIE	BECK

Normale Anwendung
USUAL APPLICATION

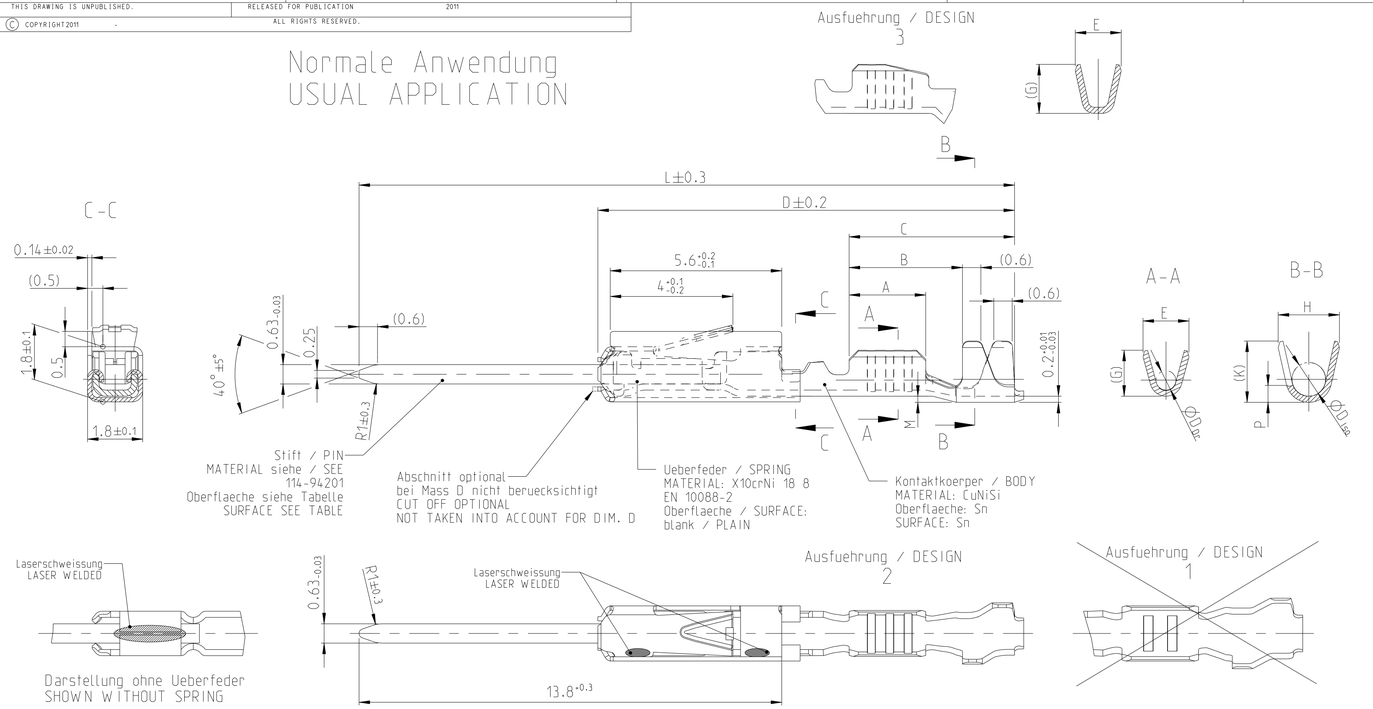

Einzeldichtungssystem
SINGLE WIRE SEAL SYSTEM

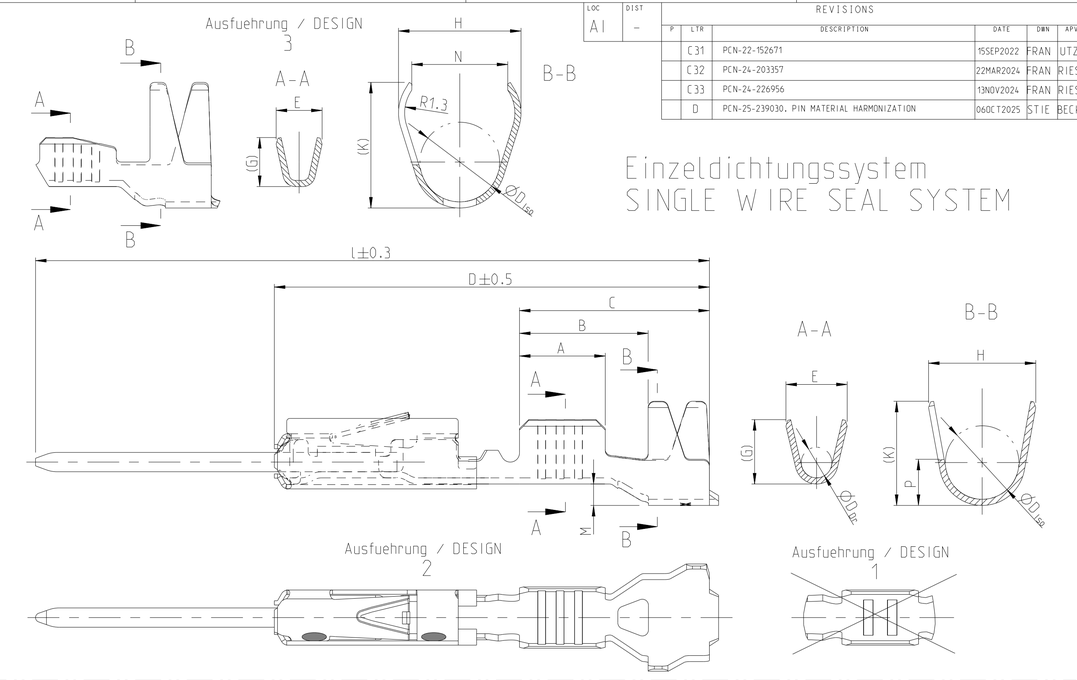

Oberflaeche / FINISH

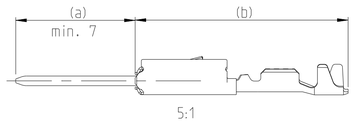

Sn: verzinnte Ausfuehrung
TINNED
(a) PIN: 0.8 µm - 3.0 µm Sn ueber/OVER 1.27 µm - 3.0 µm Ni
(b) Kontaktkoerper/BODY: 0.8 µm - 2.0 µm Sn

Ag: versilbert
SILVER
(a) PIN: 2.0 µm - 6.0 µm Ag
(b) Kontaktkoerper/BODY: 0.8 µm - 2.0 µm Sn

Au: vergoldet
GOLD
(a) PIN: min. 0.8 µm Au ueber/OVER 1.0 µm - 2.2 µm Ni
(b) Kontaktkoerper/BODY: 0.8 µm - 2.0 µm Sn

Ausfuehrung ohne Ueberfeder
nur fuer umspritzte Anwendungen
WITHOUT SPRING
ONLY FOR OVERMOLDING

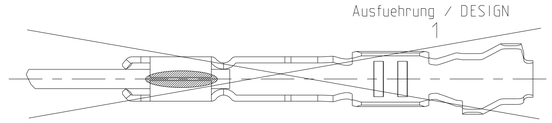

Bestell-Nr. Ausfuehrung ORDER NO. DESIGN 2	Bestell-Nr. Ausfuehrung ORDER NO. DESIGN 3	Rev.	Bestell-Nr. Ausfuehrung ORDER NO. DESIGN 5 1	Rev.	Ueberfeder vorhanden SPRING AVAILABLE	VERSION	DGB Wire Size Range mm²	Oberflaeche SURFACE	Laenge LENGTH mm	Drahtcrimp WIRE CRIMP mm	Iso-crimp INSU-CRIMP mm	Gewicht WEIGHT g	Verarbeitung Spez. APPLICATION SPEC.	DGB Wire Size Range mm²	Isolations ∅ INSULATION DIA. mm	fuer Kammer ∅3.45 FOR CAVITY DIA. 3.45 mm	Blindstopfen RUBBER PLUG	fuer Kammer ∅4 FOR CAVITY DIA. 4 mm	Blindstopfen RUBBER PLUG
														zugehoerige Einzeldichtung / SUITABLE SINGLE WIRE SEAL					
5-965908-3		A			ja / YES	Einzeldichtungssystem SINGLE WIRE SEAL SYSTEM	0.50-0.75	Ag	A = 2.8 B = 4.2 C = 6.2 D = 14.3 M = 0.7 L = 22	E = 2 G = 2.1 D_{Dr} = 1	H = 3.5 K = 3.4 P = 1.5 D_{Iso} = 2.4	0.18	114-18025	0.75 0.5	1.4-2.1	967067-1 gruen GREEN	967056-1 blau / BLUE	963142-1 schwarz BLACK	963143-1 weiss / WHITE
5-965908-2		G	8 965908-2	E	ja / YES			Au											
5-965908-1		E	8 965908-1	C	ja / YES			Sn											
-		-	8 1-962886-1	N	nein / NO		0.25-0.35	Sn	A = 2.5 B = 3.9 C = 5.9 D = 14 M = 0.7 L = 21.7	E = 1.8 G = 1.8 D_{Dr} = 0.8	H = 3.5 K = 3.4 P = 1.5 D_{Iso} = 2.4	0.12		0.35 0.2	0.9-1.4	967067-2 gelb YELLOW		963142-2 grau GREY	
5-962886-3		A			ja / YES			Ag				0.16							
5-962886-2		S	8 962886-2	M	ja / YES			Au											
5-962886-1		P	8 962886-1	M	ja / YES			Sn											
	2141830-3	A			ja / YES		0.13/0.17 △6	Ag	A = 2.5 B = 4 C = 5.9 D = 14.3 M = 0.6 L = 21.7	E = 1.5 G = 1.4	H = 4 K = 3.9 N = 3.1 D_{Iso} = 2.6	0.15		0.13 0.17	0.85-1.4	967067-2 gelb YELLOW		963142-2 grau GREY	
	2141830-2	A			ja / YES			~~Au~~											
	2141830-1	B			ja / YES			Sn											
-		-			nein / NO	normale Anwendung USUAL APPLICATION	0.50-0.75	Au	A = 2.8 B = 3.8 C = 5.6 D = 13.65 M = 0.2 L = 21.5	E = 2 G = 2.1 D_{Dr} = 1	H = 2.7 K = 2.9 P = 0.7 D_{Iso} = 1.6	0.17	114-18021						
6-963716-1		B			nein / NO			Sn				0.12							
6-963716-2		B	8 1-963716-2	B	nein / NO			Au											
5-963716-3		A			ja / YES			Ag				0.17							
5-963716-2		AA	8 963716-2	Y	ja / YES			Au											
5-963716-1		Y	8 963716-1	V	ja / YES			Sn											
6-928918-3		A			ja / YES		0.25-0.35	Ag	A = 2.5 B = 3.6 C = 5.6 D = 13.65 M = 0.2 L = 21.5	E = 1.8 G = 1.8 D_{Dr} = 0.8	H = 2.3 K = 2.3 P = 0.6 D_{Iso} = 1.4	0.16							
6-928918-2		AA	8 1-928918-2	Y	ja / YES			Au											
6-928918-1		Y	8 1-928918-1	V	ja / YES			Sn											
5-928918-2		B	8 928918-2	Y	nein / NO			Au				0.12							
5-928918-1		Y	8 928918-1	V	nein / NO			Sn											
	2141828-3	A			ja / YES		0.13/0.17 △6	Ag	A = 2.5 B = 3.7 C = 5.4 D = 13.65 M = 0 L = 21.5	E = 1.5 G = 1.4	H = 2 K = 1.9 D_{Iso} = 1.1	0.15							
	2141828-2	B			ja / YES			Au											
	2141828-1	B			ja / YES			Sn											
1355719-3		A			ja / YES		0.08-0.22	Ag		E = 1.5 G = 1.5 D_{Dr} = 0.65	H = 2 K = 2 D_{Iso} = 1.1	0.15							
1355719-2		D			ja / YES			Au											
1355719-1		D			ja / YES			Sn											

NOTES
Bemerkungen

1 Datumscode (Woche/Jahr z.B. KW38/Jahr2009) und TE-Revision (z.B. Rev. A)
DATE CODE (WEEK/YEAR E.G. WEEK NUMBER 38/YEAR2009) AND TE REVISION (E.G. REV. A)

2 Passend zu Buchsenkontakt siehe Zeichnung 929454
SUITABLE FOR SOCKET CONTACT SEE DRAWING 929454

3 Einzelheiten der Ausfuehrung bleiben dem Hersteller ueberlassen
DETAILS OF DESIGN ARE LEFT TO MANUFACTURER

4 Nur fuer FLR-Leitung nach DIN 72551 Teil 6
FOR FLR-CONDUCTOR ACCORDING TO DIN 72551-6 ONLY

△5 nicht fuer Neuanwendung
NOT FOR NEW APPLICATION

△6 zugverstaerkte Leitung nach LV 112-4
REINFORCED WIRE ACCORDING LV 112-4

7 Bei doppelt fallenden Werkzeugen wird die erste Ueberfeder mit einer Kennzeichnung "-" versehen
WITH DOUBLE OUT DIES THE FIRST SPRING WILL BE PROVIDED WITH AN INDICATION "-"

△8 Varianten von Design1 werden durch die entsprechenden Versionen von Design2 ersetzt
VARIANTS OF DESIGN1 ARE SUPERSEDED BY CORRESPONDING VERSIONS OF DESIGN2

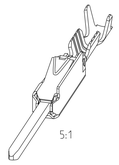

THIS DRAWING IS A CONTROLLED DOCUMENT.

DIMENSIONS: mm

TOLERANCES UNLESS OTHERWISE SPECIFIED:
0 PLC ±
1 PLC ±
2 PLC ±
3 PLC ±
4 PLC ±
ANGLES ±4°
±0.2

MATERIAL - -
FINISH - -

DWN	S.Garcia	06JAN1999
CHK	R.Jetter	06JAN1999
APVD	M.Bleicher	13AUG2003
PRODUCT SPEC	108-18030	
APPLICATION SPEC	114-18021 / -18025	
WEIGHT	-	

TE Connectivity

NAME: MQS Tabellenzeichnung Stiftkontakt TABLE PIN CONTACT

SIZE	CAGE CODE	DRAWING NO	RESTRICTED TO
A1	00779	C-929453	-

CUSTOMER DRAWING | SCALE 10:1 | SHEET 1 OF 1 | REV D

4805 (3/11)