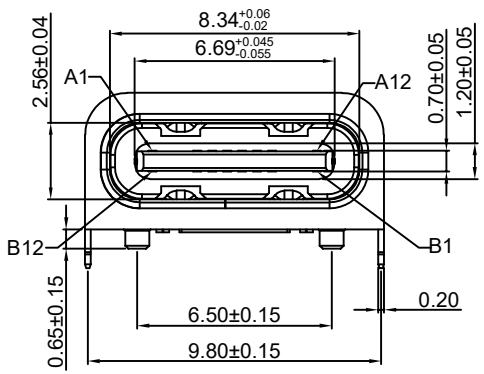

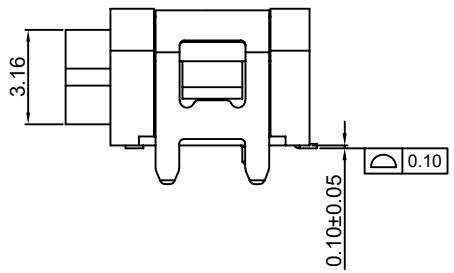

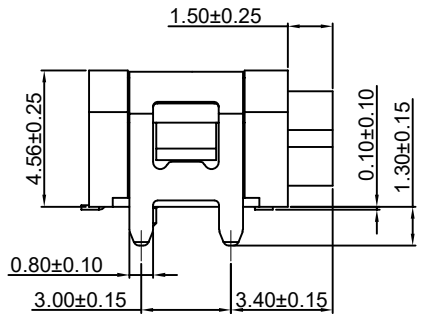

NOTES:
1. CURRENT RATING:
   3.0A MAX.
2. DIELECTRIC WITHSTAND VOLTAGE:
   100VAC.
3. TEMPERATURE RANGE:
   −30 °C ~ 85 °C.
4. CONTACT RESISTANCE:
   40 MILLIONHM MAX.
5. INSULATION RESISTANCE:
   100 MEGOHMS MIN.
6. INSERTION FORCE :
   5N~20N.
7. UNMATING FORCE:
   8N~20N.
8. DURABILITY:
   10,000 CYCLES.
9. WATERPROOF RATING: IPX7.
10. ALL PRODUCTS COMPLY WITH RoHS ENVIRONMENTAL REQUIREMENTS.
11: MARK "▼" AS THE FOCUS, FIRST ITEM INSPECTION.
12: MARK "⊗" TO MEASURE DIMENSIONS FOR FAI.

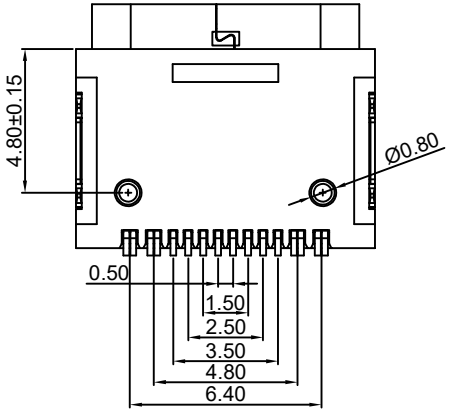

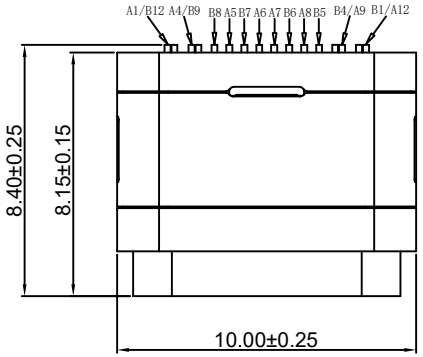

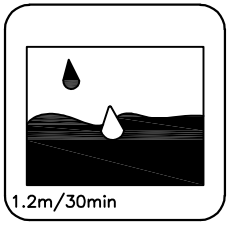

A1	A2	A3	A4	A5	A6	A7	A8	A9	A10	A11	A12
GND			VBUS	CC1	D+	D−	SUB1	VBUS			GND
GND			VBUS	SUB2	D−	D+	CC1	VBUS			GND
B12	B11	B10	B9	B8	B7	B6	B5	B4	B3	B2	B1

TABLE:

P/N	PART NAME		MATERIALS	FINISH
	环氧树脂			
	外壳		SUS304R−1/2H.T=0.20mm	Ni:50u"Min;
	内壳		SUS304R−1/2H.T=0.30mm	Ni:50u"Min;
	护套		PA9T(G.F30%).BLACK.	/
	MD半成品	端子	C2680R−H.T=0.15mm	Ni:30u"Min; Au:CONTACT AREA:1u", Solder AREA:G/F
		塑胶	LCP(G.F30%) BLACK.	/

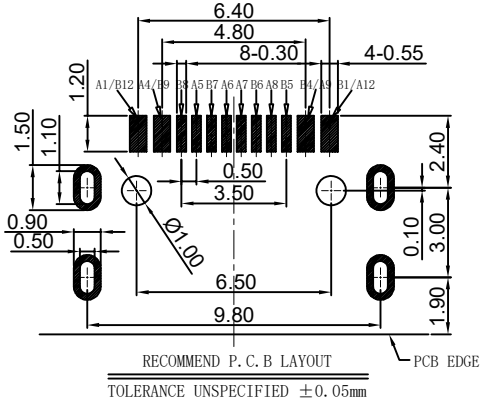

防水圈:

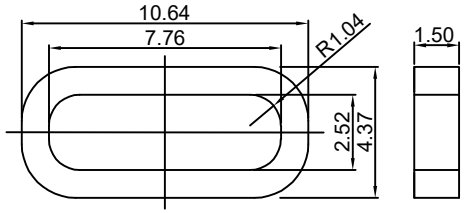

1：材料：黑色硅胶，符合ROHS环境管理物质.
2：尺寸：外径:10.64*4.86*1.50mm.

深圳市华宇创精密电子有限公司

TOLERANCE: X.X ±0.30, X.XX ±0.25, X.XXX ±0.15, X.° ±2°, X.X° ±0.5°	DRAWED BY : 陈一鸣	DATE : 2014-02-23	PART NAME: USB TYPE C 防水母座16P 板上SMT L=8.15 四脚DIP带柱
	CHECKED BY: 马跃	DATE : 2014-02-23	PART NO. HYCW615-USBC16-815B
UNIT: mm [inch]	APPROVED BY: 邱敏	DATE : 2014-02-23	MOLD NO. /
SCALE:1:1 SIZE: A4			DRAW NO: HYC-2510171456
			SHEET NO. 1 OF 1