REVISIONS					
REV.	ECN NO.	LOCATION	DESCRIPTION	DATE	DESIGN
A1	N/A			2025.04.22	
A2	N/A	A2 X6		2025.08.29	

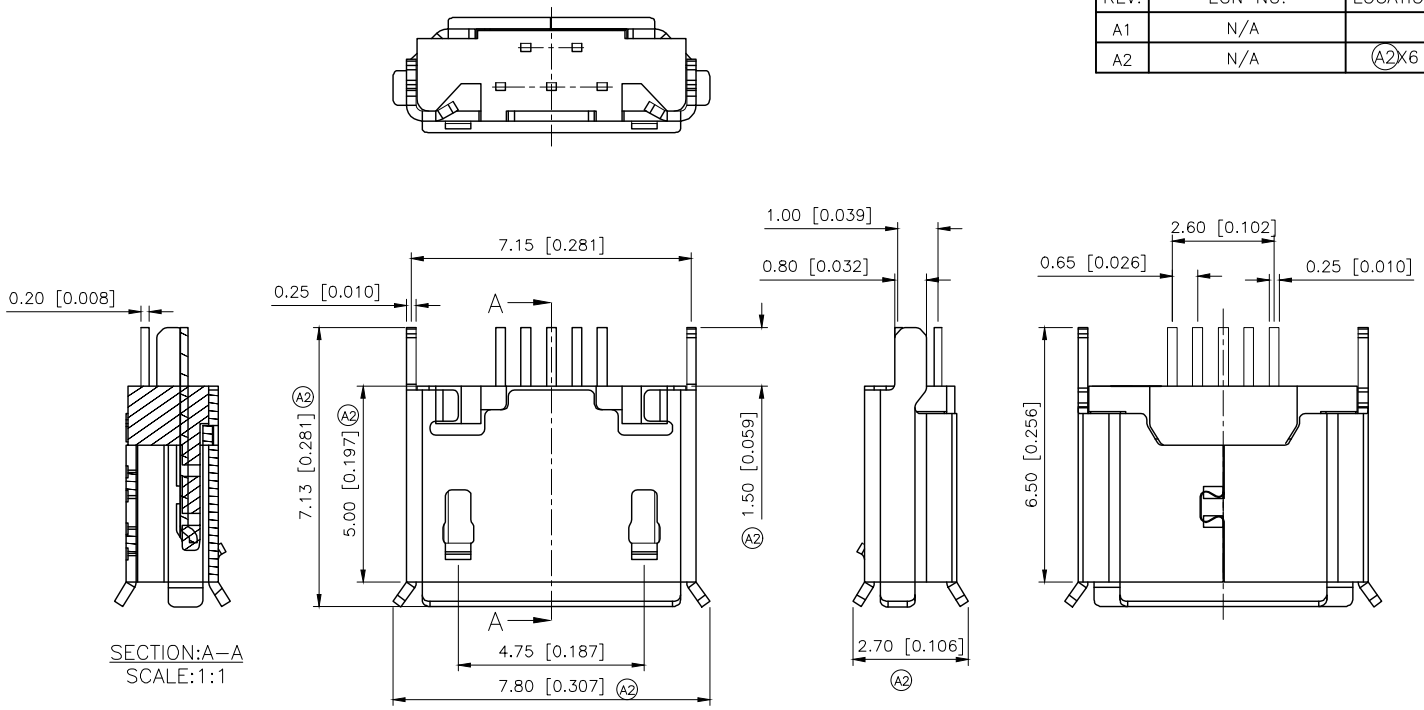

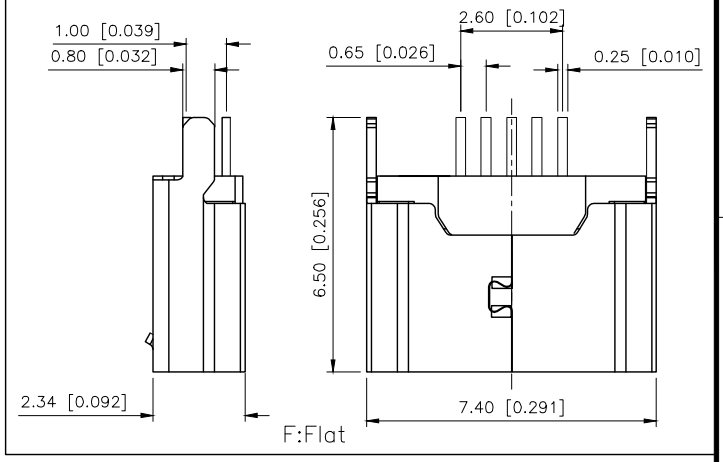

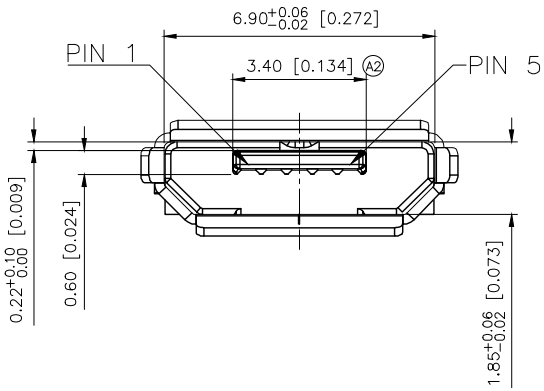

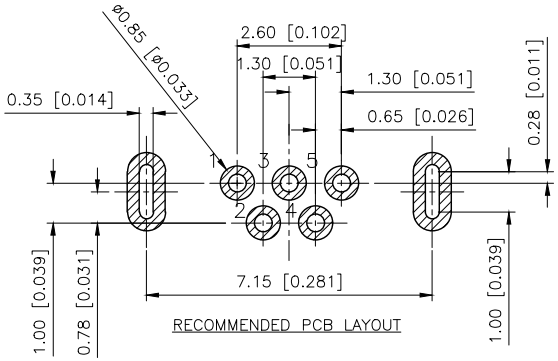

Note:
1.Material:
- 1.1 Housing: High temperature thermoplastic with g.f,UL94V–0
- 1.2 Contact: copper alloy,t=0.20mm
- 1.3 Shell: SUS,t=0.25mm

2.Specification:
- 2.1 Current rating:1,5PIN 1.8A Max/2,3,4PIN 1A Max.
- 2.2 Dielectric withstanding voltage: 100 V(ac) for 1 min.
- 2.3 Contact resistance: 30 mΩ Max.
- 2.4 Insulation resistance: 100 MΩ Min.
- 2.5 Total mating force: 3.57 Kgf Max.
- 2.6 Total un mating force: 1.0 Kgf Min.

3.FINISH:
- 3.1 CONTACT: Gold 1U"MIN

U255–05XN–4BH70–XS

- 1:AU 1U''
- N:NICKEL
- B:Black
- 4:LCP
- S:Scrolls
- F:Flat
- S:SUS

AuGLAR	±5°
X.	±0.40
X.x	±0.30
X.xx	±0.20
X.xxx	±0.15
UNSPECIFIED TOLERAuCES	

XKB Connection

DESIGN		VIEW:	MODEL TYPE: MICRO USB
CHECKED		UNIT: mm/in	PART NO.: U255–05XX–4BH70–XS
APPROVED		SIZE: A4	DWG NO.:

XKB INDUSTRIAL PRECISION CO.,LIMITED

SCALE	PAGE	REVISION
N/A	1/1	A2