REVISIONS					
REV.	ECN NO.	LOCATION	DESCRIPTION	DATE	DESIGN
A0	N/A		INITIAL RELEASE	/	/
A1	N/A	A1 X1	pin脚尺寸变更，图面升级整理图面	2025.07.03	阿树

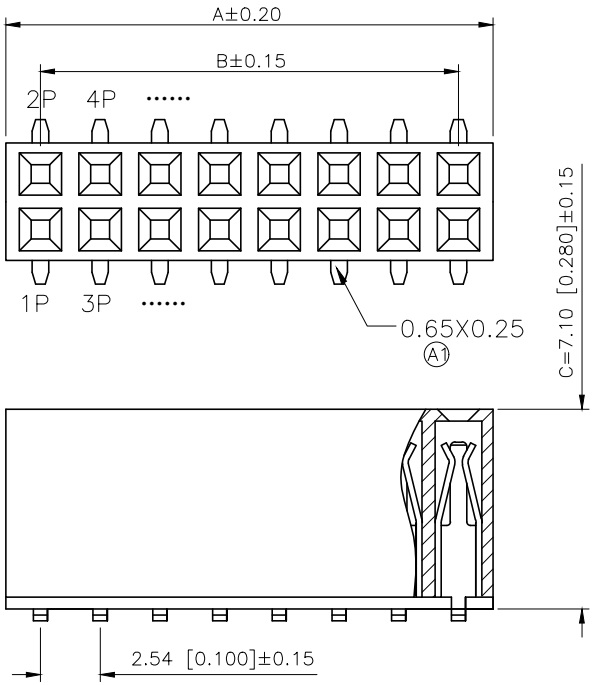

SPECIFICATIONS
Rated Current:1.0AMP
Contact Resistance:20mΩ Max
Withstand Voltage:500V AC/DC
Insulation Resistance:1000MΩ Min
Operation Temperature:−40°c to +105°c
Contact Material:Phosphor Brass
Contact Plating:Au or Sn Over Ni
Insulator Material:Polyester(UL94V−0)
Standard:PA6T
Max.Processing Temp: 230°C for 30−60 seconds
(260°C for 10 seconds)

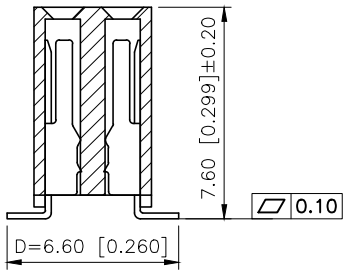

poles	Dimensions(mm)		poles	Dimensions(mm)	
	A	B		A	B
2x02	5.48	2.54	2x22	56.28	53.34
2x03	8.02	5.08	2x23	58.82	55.88
2x04	10.56	7.62	2x24	61.36	58.42
2x05	13.10	10.16	2x25	63.90	60.96
2x06	15.64	12.70	2x26	66.44	63.50
2x07	18.18	15.24	2x27	68.98	66.04
2x08	20.72	17.78	2x28	71.52	68.58
2x09	23.26	20.32	2x29	74.06	71.12
2x10	25.80	22.86	2x30	76.60	73.66
2x11	28.34	25.40	2x31	79.14	76.20
2x12	30.88	27.94	2x32	81.68	78.74
2x13	33.42	30.48	2x33	84.22	81.28
2x14	35.96	33.02	2x34	86.76	83.82
2x15	38.50	35.56	2x35	89.30	86.36
2x16	41.04	38.10	2x36	91.84	88.90
2x17	43.58	40.64	2x37	94.38	91.44
2x18	46.12	43.18	2x38	96.92	93.98
2x19	48.66	45.72	2x39	99.46	96.52
2x20	51.20	48.26	2x40	102.00	99.06
2x21	53.74	50.80			

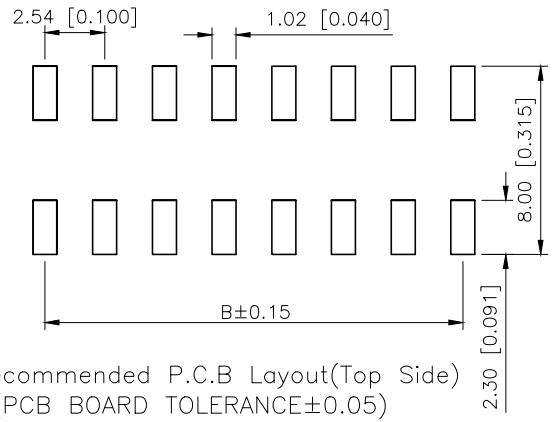

Recommended P.C.B Layout(Top Side)
(PCB BOARD TOLERANCE±0.05)

PART NO.:

X6521 F V S−2xXX−C71 D66
① ② ③④ ⑤ ⑥ ⑦

①Series No
②Category:F−Female
③Welding Board Angle:V−Stright 180°
④Welding Way: S−SMT
⑤Row No.Pin No:2xXX−2x01~2x40Pin
⑥Plastic Height:C=7.10mm
⑦Pin Pitch:D=6.60mm

PART NO	Material	Material(pin)	Finish(Pin)	Suitable XKB Wafer
X6521FRS−2xXX−C71D66	PA6T UL94V−0	Brass	1U"Gold	X6521W

AuGLAR	±5°
X.	±0.40
X.x	±0.30
X.xx	±0.20
X.xxx	±0.15
UNSPECIFIED TOLERAuCES	

XKB Connection 星创

DESIGN	阿树	VIEW:	MODEL TYPE: 2.54mm BTB Connectors
CHECKED		UNIT: mm/in	PART NO.: X6521FVS−2xXX−C71D66
APPROVED		SIZE: A4	DWG NO.:

XKB INDUSTRIAL PRECISION CO.,LIMITED

SCALE	PAGE	REVISION
N/A	1/1	A1