REVISIONS					
REV.	ECN NO.	LOCATION	DESCRIPTION	DATE	DESIGN
A1	N/A			2025.05.22	
A2	N/A	A2 X2		2025.09.05	

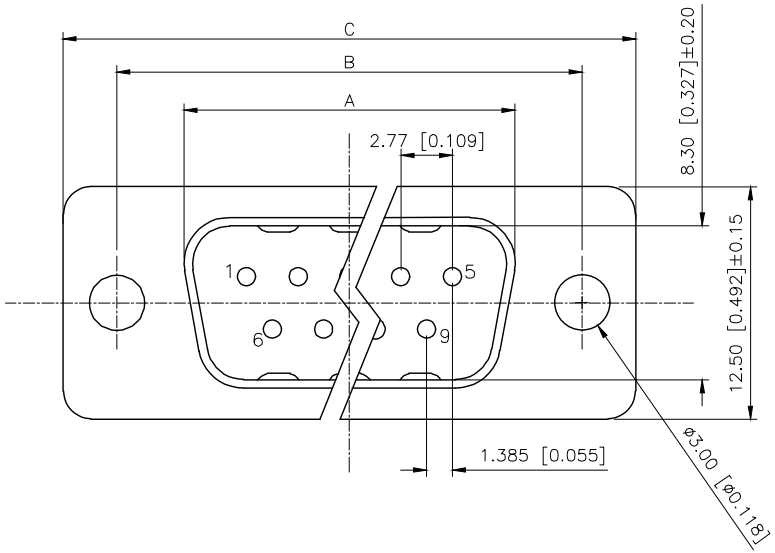

Specifications:

1.Voltage rating:250VAC/DC
250V AC/DC
2.Current rating:3A AC/DC
: 3A AC/DC
3.Withstanding voltage:500V AC/minute
500V AC/
4.Temperature range: −55 −+105
−55 −+105
5.Insulation resistance:1000MΩ MIN
:1000MΩ MIN
6.Contact resistance:30mΩ Max
30mΩ Max
Materiai

7.Rubber core:PBT UL94V−0
PBT UL94V−0
8.The iron shell:SPCC−SD Nivkel Plating/Tin Plating/Gold Plating
SPCC−SD, / /
9.Terminal:Copper alloy

PART NO.:

X01 XX W X X X X

Series NO.
Row No.Pin No.XX−09;15;25;37
Welding Board Angle :W−Male
T Tradutional C Car−pin
Planting Categotry: 1:1U' 2:2U' 3:3U' 4:5U' 5:15U' 6:30U' 7:AuSn'
Color:B−BLACK W−White BL−Blue
1:TYPE−1; 2:TYPE−2; 3:TYPE−3; 4:TYPE−4

NUMBER OF POSITIONS	DIMENSION			
	A±0.25	B±0.13	C±0.38	D±0.25
9	18.00	24.99	30.80	19.28
15	26.50	33.32	39.20	27.51
25	40.00	47.04	53.05	41.28
37	56.60	63.50	69.40	57.71

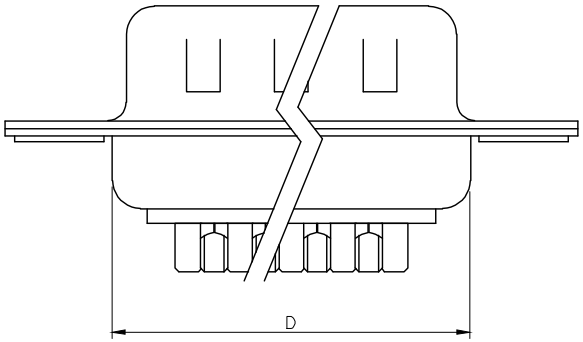

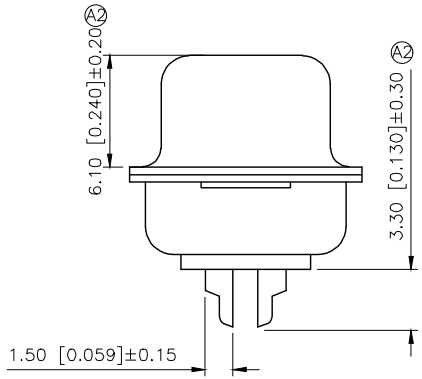

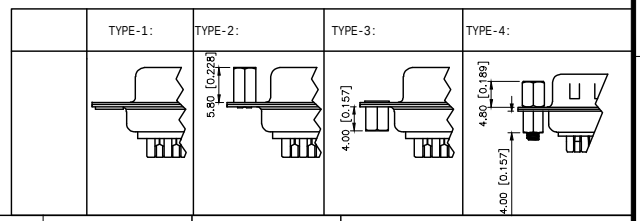

AuGLAR	±5°
X.	±0.40
X.x	±0.30
X.xx	±0.20
X.xxx	±0.15
UNSPECIFIED TOLERAuCES	

XKB Connection

DESIGN		VIEW:	MODEL TYPE: D−SUB
CHECKED		UNIT: mm/in	PART NO.: X01XXWXXXX
APPROVED		SIZE: A4	DWG NO.:

XKB INDUSTRIAL PRECISION CO.,LIMITED

SCALE	PAGE	REVISION
N/A	1/1	A2

www.helloxkb.com www.helloxkb.cn www.xk−dg.cn