REV.	ECN NO.	DATE
A	N/A	2025/11/18

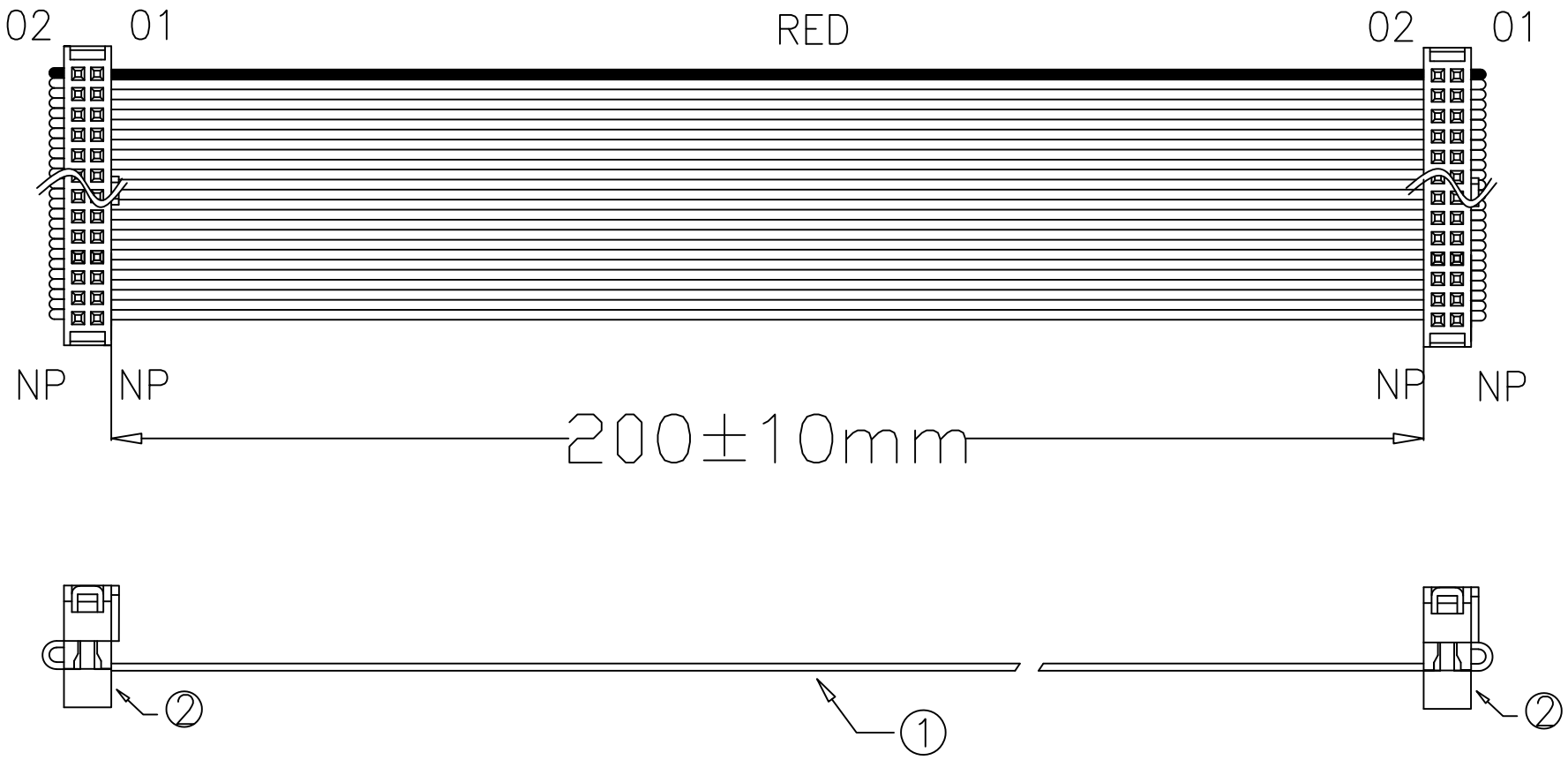

REMARKS :
1.100% OPEN/SHORT TEST.
2.TEST VOLTS/INSULATION RESISTANCE :
DC 5V/500KΩ.
3.INSPECTION DIMENSION: DIM L.

ITEM	DESCRIPTION	Q'TY	REMARK
2	MFC-XXH(3) PH=2.0mm	2	PBT+G/F
1	FLC-XXP UL2651	1	28AWG L=230mm GRAY 7*0.127

	SIGNATURE	DATE
DRN.	GRP	2025/11/18
CHK.		
APP.		

DWG NO.: MTFC20-XXYW*2-L200-A1

Q&T P/N: -------

CUS. P/N:

CODE NO.	---
CUS. NO.	---
SCALE	---
UNIT	mm
PAGE	1/1

TOLERANCE:
x.
.x
.xx
ANG.

MINTRN CO.,Ltd.

DRAWING NO.